PSI Services LLC
3210 E Tropicana
Las Vegas, NV 89121
www.psiexams.com

STATE OF NORTH CAROLINA

ELECTRICAL CONTRACTORS EXAMINATION CANDIDATE INFORMATION BULLETIN

Introduction 3
Examination Scheduling Procedures 3
On-line, via the Internet 4
Telephone 4
Rescheduling/Canceling an Examination 4
Missed Appointment or Late Cancellation 4
Examination Accommodation 4
Emergency Examination Center Closing 4
Social Security Number Confidentiality 4
Examination Site Location 4
Reporting to the Examination Site 5
Required Identification 5
Security Procedures 5
Taking the Examination by Computer 6
Identification Screen 6
Tutorial 6
Examination Question Example 6
Examination Review 6
Score Reporting 6
Duplicate Score Reports 6
Tips for Preparing for your License Examination 6
Reference Materials 7
Examination Content Outlines 8
Sample Questions 12
Practice Questions 14
NC Electrical Contractors Licensing Law 22
Application for Examination 66
Lighting and Power Plans 76

Please refer to our website to check for the most updated information at www.psiexams.com

Copyright © 2018 by PSI Services LLC

Last Revised 10/1/2018

MEMBERS OF THE BOARD

Chairman

GERALD HARVELL, Concord, NC

Vice Chairman

JIM CARPENTER, Durham, NC

Members

MARK GRIFFIN, Monroe, NC

CLIFF ISAAC, Raleigh, NC

RICHARD JONES, Oxford, NC

STUART LANEY, Wilmington, NC

DR. LEONARD WHITE, Raleigh, NC

MEMBERS OF THE STAFF

TIM NORMAN, Executive Director

WILLIAM A. PARRIS, Continuing Education, Examinations Manager/Enforcement Coordinator

ROBERT H. LAWSON, Jr., Western Region Field Representative/Investigator

MITCH BRYANT, Central Region Field Representative/Investigator

ROY A. WILSON, Eastern Region Field Representative/Investigator

EPSIE STEVENS, Office Manager

MICHELLE A. AMES, Administrative Program Assistant – Exam Applications & Investigations

ROBERT C. BISSETTE, Administrative Program Assistant – Continuing Education & Licensing

TONYA M. LYNCH, Administrative Program Assistant – Reception & Licensing

Executive Offices
3101 Industrial Drive, Suite 206
Raleigh, North Carolina 27609
Phone: (919) 733-9042
Fax: (800) 691-8399
www.ncbeec.org

All Rights Reserved.
August 2017

North Carolina Examination Procedure Checklist

Before registering for an examination, make sure that you have reviewed the following checklist.

- You must get authorization from the Board to take an examination.
- Complete the *Examination Application Form* (found at the end of this Candidate Information Bulletin) and return it to the Board's office with the appropriate application examination fee and other required information as detailed on the instruction page of the application.
- Upon approval you will receive a *Notice of Approval* letter from the Board.
- Your authorization includes only one examination attempt. Should you fail the examination, you must re-apply to the Board for a new authorization.

Retest Rules

- A person who fails a qualifying examination shall not be eligible to take another examination in the same classification until three months after the date of the failed examination.

- A person who fails an examination in the same classification three times must satisfactorily complete a minimum of 16 hours of classroom education on the electrical code provided by a board-approved continuing education sponsor before retaking the examination.

Schedule for your examination:

- Complete the registration form on line, at www.psiexams.com, and submit it to PSI via the Internet or;
- Call (800) 733-9267 to register.

Take your examination:

- Must bring two forms of valid (non-expired) identification, which bear your signature. One of these must also have your photograph.
- Your name as shown on the state approved roster must exactly match the name on the photo I.D. used when checking in at the examination site.
- Arrive 30 minutes prior to appointment.

After your examination:

- You will receive your results upon completion.
- Upon passing the examination, your results will be made available to the Board to access.
- For licensing information, go to: www.ncbeec.org or call: the Board at (919) 733-9042.

Be sure you understand the contents of this bulletin before applying for your examination. Please retain and use it as a reference when contacting PSI.

INTRODUCTION

The Board develops its own licensing examinations and determines the scores that applicants must achieve to pass them. However, the Board has contracted with PSI, a national testing company that provides a variety of licensing and certification services to regulatory agencies, to administer and score the licensing examinations. Although the Board has delegated certain examination administration functions to PSI, the Board itself remains responsible for the quality of its examination programs.

This Candidate Information Bulletin is furnished by the North Carolina State Board of Examiners of Electrical Contractors (NCBEEC, henceforth referred to as the "Board") to each candidate interested in applying to take the qualifying examination for a North Carolina electrical contracting license in the LIMITED, INTERMEDIATE, or UNLIMITED classification, or in any of the following SPECIAL RESTRICTED classifications: SINGLE FAMILY DETACHED RESIDENTIAL DWELLING (SP-SFD), FIRE ALARM/LOW VOLTAGE (FA/LV), PLUMBING AND HEATING (SP-PH), ELECTRIC SIGN (SP-ES), ELEVATOR (SP-EL), GROUNDWATER PUMP (SP-WP) and SWIMMING POOL BONDING (SP-SP).

This Candidate Information Bulletin contains all required forms, as well as, the *Electrical Contractors Licensing Law* (General Statutes Chapter 87, Article 4) and the *Board's Rules* (Title 21, North Carolina Administrative Code, Chapter 18B) for the implementation of these laws along with other pertinent laws applicable to electrical contractors. Also included is the *Lighting and Power Plans* that will be referenced on the qualifying examinations in the LIMITED, INTERMEDIATE, and UNLIMITED classifications.

Limited, Intermediate, Unlimited Examinations
The examination for an electrical contracting license in the Limited, Intermediate, and Unlimited classifications consists of one hundred (100) multiple-choice questions. You will have a maximum time of six (6) hours to complete the examination.

Special Restricted Examinations: Single Family Detached Residential Dwelling (SP-SFD), Plumbing and Heating (SP-PH), Electric Sign (SP-ES), Elevator (SP-EL), and Groundwater Pump (SP-WP)
The examination for an electrical contracting license in any of the Special Restricted classifications (excluding Fire Alarm/Low Voltage and Swimming Pool Bonding) consists of forty (40) multiple-choice questions. You will have a maximum time of three (3) hours to complete the examination.

Special Restricted Examinations: Fire Alarm/Low Voltage (FA/LV)
The examination for an electrical contracting license in the Special Restricted Fire Alarm/Low Voltage (FA/LV) classification consists of fifty (50) multiple-choice questions. You will have a maximum time of three (3) hours to complete the examination.

Special Restricted Examination: Swimming Pool Bonding (SP-SP)
The examination for an electrical contracting license in the Special Restricted Swimming Pool Bonding (SP-SP) classification consists of twenty-five (25) multiple-choice questions. You will have a maximum time of one (1) hour to complete this examination.

Examinations: All Classifications
The examination is designed as an "OPEN BOOK" examination. That is, each candidate will be furnished with a copy of the 2017 National Electrical Code. The 2013 edition of the National Fire Alarm Code will also be furnished to each candidate taking the examination in the Limited, Intermediate, Unlimited, SP-SFD and SP-FA/LV Classifications. Candidates will be allowed to refer to any part of the Board furnished codes during the examination. Calculators, scratch paper, pencils and any other will be provided at the test center. No other books or reference materials are permitted. The examination is designed to measure how well a person has mastered the fundamentals of electrical installations and to measure his/her ability to interpret and apply the appropriate sections of the NEC and/or the National Fire Alarm Code to practical problems.

NOTE: *Examination questions concerning the Electrical Contractors Licensing Law (General Statutes Chapter 87, Article 4) and the Board's Rules for the Implementation of the Electrical Contractors Licensing Law (Title 21, North Carolina Administrative Code, Chapter 18B) are designed as "CLOSED BOOK" questions. Also, examination questions in connection with the NASCLA Contractors' Guide to Business, Law and Project Management, North Carolina Electrical Edition are designed as "CLOSED BOOK" questions. That is, no candidate will be allowed to refer to any part of these documents during the examination.*

EXAMINATION SCHEDULING PROCEDURES

After you carefully study this Candidate Information Bulletin and select the classification of license you desire and for which you feel qualified to be examined:

- Complete the *Examination Application Form* (found at the end of this Candidate Information Bulletin) and return it to the Board's office with the appropriate application examination fee and other required information as detailed on the instruction page of the application.
- If approved by the Board, your application will be processed and you will receive a *Notice of Approval* letter.
- Your authorization includes only one examination attempt. Should you fail the examination, you must re-apply to the Board for a new authorization.
- A candidate who fails a qualifying examination shall not be eligible to take another examination in the same classification until three months after the date of the failed examination.

A candidate who fails an examination in the same classification three times must satisfactorily complete a minimum of 16 hours of classroom education on the electrical code provided by a board-approved continuing education sponsor before retaking the examination.

The fee for your examination is included in the payment you made to the Board along with your submission of the *Examination Application Form*. There are no additional fees.

ON-LINE (WWW.PSIEXAMS.COM)

For the fastest and most convenient examination scheduling process, PSI recommends that you register for your examinations using the Internet. You register online by accessing PSI's registration website at www.psiexams.com. Internet registration is available 24 hours a day.

1. Log onto PSI's website and create an account. Please enter your email address and first and last name. This information must match exactly with the information the Board has on file. Be sure to **check the box next to** "*Check here to attempt to locate existing records for you in the system*".
2. You will be asked to select the examination and enter your SS#. Your record will be found and you will now be ready to schedule for the exam. Enter your zip code and a list of the testing sites closest to you will appear. Once you select the desired test site, available dates will appear. If you have problems contact PSI at (800) 733-9267 for help.

TELEPHONE

For telephone registration, you will need a valid credit card (Visa, MasterCard, American Express or Discover).

PSI registrars are available at (800) 733-9267, Monday through Friday between 7:30 am and 10:00 pm, and Saturday-Sunday between 9:00 am and 5:30 pm, Eastern Time, to receive your payment and schedule your appointment for the examination.

CANCELING OR RESCHEDULING AN APPOINTMENT

You may cancel and reschedule an examination appointment without forfeiting your fee if your cancellation notice is received 2 days before the scheduled examination date. For example, for a Monday appointment, the cancellation notice would need to be received on the previous Saturday. You may reschedule online at www.psiexams.com or call PSI at (800) 733-9267.

Note: A voice mail message is not an acceptable form of cancellation. Please use the PSI Website or call PSI to speak directly to a Customer Service Representative.

MISSED APPOINTMENT OR LATE CANCELLATION

If you miss your appointment, you will not be able to take the examination as scheduled, further you will forfeit your examination fee, if you:

- Do not cancel your appointment 2 days before the scheduled examination date;
- Do not appear for your examination appointment;
- Arrive after examination start time;
- Do not present proper identification when you arrive for the examination.

EXAMINATION ACCOMMODATIONS (ADA)

All examination centers are equipped to provide access in accordance with the Americans with Disabilities Act (ADA) of 1990, and every reasonable accommodation will be made in meeting a candidate's needs. Applicants with disabilities or those who would otherwise have difficulty taking the examination must contact the Board. You must be approved by the Board for examination accommodations prior to PSI making the appropriate accommodations. Therefore, it is best to first get approval for examination accommodation from the Board before contacting PSI for an examination date and time.

EXAMINATION SITE CLOSING FOR AN EMERGENCY

In the event that severe weather or another emergency forces the closure of an examination site on a scheduled examination date, your examination will be rescheduled. PSI personnel will attempt to contact you in this situation. However, you may check the status of your examination schedule by calling (800) 733-9267. Every effort will be made to reschedule your examination at a convenient time as soon as possible. You will not be penalized. You will be rescheduled at no additional charge.

SOCIAL SECURITY NUMBER CONFIDENTIALITY

PSI will use your social security number only as an identification number in maintaining your records and reporting your examination results to the Board. A Federal law requires State agencies to collect and record the social security numbers of all licensees of the professions licensed by the Board.

EXAMINATION SITE LOCATIONS

ASHEVILLE
1306 C Patton Avenue
Asheville, NC 28806

From I-40 take exit 44, Smokey Park Highway (US 19/ 23), turn left. Proceed North/East approx. 3 miles (the test center is in a multi-building complex between Haywood Rd and Druid). Turn right onto Haywood Rd at intersection of Patton (19/23) and Haywood Rd (Swannanoa Cleaners on right.) Proceed approximately 0.2 miles and turn left onto Parkwood. Follow building #'s to 1306, approx. 5th building complex on right, past the BB&T bank.

From I-240 exit 3A to 19/23 (Patton Ave) and proceed South approx. 2 miles (the test center is in a multi-building complex between Druid and Haywood Rd). Take a left onto Druid (Burger King is on the left), then first right. Proceed (past post office) through stop sign and take first left into parking lot of building #1306.

CHARLOTTE
Tyvola Executive Park One
5701 Westpark Dr, #102
Charlotte, NC 28217

From I-77S towards Columbia, exit Tyvola Road (Exit #5). Turn left at Tyvola Road. Make a right at Westpark Dr.

From I-77N, exit Tyvola Road (Exit #5). Bear right at Tyvola Road. Turn right at Westpark Dr.

GREENVILLE
Charles Center
2404 South Charles Blvd Suite B
Greenville, NC 27858

From the South, proceed North on State Highway 11, and merge to the right onto Greenville Blvd SE (US 264/State 43). Turn right on Charles Blvd.
From the East, proceed West on US 264 and turn left onto Greenville Blvd SE. Turn left on Charles Blvd.
From the West, proceed East on US 264. Turn right on Memorial Drive. Turn left on Greenville Blvd. Turn right on Charles Blvd.

RALEIGH
5711 Six Forks Road Suite 208
Raleigh, NC 27609

From I-440, exit 8, Six Forks Road and proceed North. Turn left on Loft Lane, then right into the first driveway.

FAYETTEVILLE
3724 Sycamore Dairy Road, Suite 128
Arbor Alley Building
Fayetteville, NC 28303

From the North, take I-95 South. Merge onto US 301/I-95 Business Route South towards Fayetteville/Fort Bragg/Pope AFB. Turn right onto NC-210/NC-24 Grove St. which becomes Rowan St. From Rowan St., turn right onto Bragg Blvd. Turn left onto Sycamore Dairy Road.
From the South, take I-95 North to Exit 46 and enter NC 87, Martin Luther King (MLK). Take the MLK to the Bragg Blvd exit. Turn left on Bragg Blvd. Stay in the left lane for a few miles. When you get to the traffic light at McDonald's, bear left onto Sycamore Dairy Rd. Very shortly there is another traffic light. Just past it, on the right, turn into the Arbor Alley strip mall.
From the Northwest, take NC-87 South to NC-24 E/Bragg Blvd. Continue on NC-24 E/Bragg Blvd beyond the intersection with Hwy 401 Bypass. Turn right onto Bargain Street and proceed to Sycamore Dairy Road.
From the Southwest, take US 401 North and turn left onto 401 Bypass (Skibo Road). Continue on 401 Bypass/Skibo Road. Turn right onto Legend Ave; turn left onto Sycamore Dairy Road.
PSI is located at the far back end of the Arbor Alley strip mall. The strip mall is located in between the State ABC store and Pricillas.

WILMINGTON
Judges Road Business Park
311 Judge's Road, Suite 8D
Wilmington, NC 28405

When Interstate 40 ends, it merges with State Highway 132 (College Road). Exit Market Street (Highway 17) and proceed northeast toward Jacksonville, approximately 1 mile. Turn left at Judge's Road. As you approach Judge's Road Business Park, you will see a dozen brick buildings housing industrial units. Turn left into the Business Park and proceed to the third aisle. Turn right down the aisle for Building 8. Suite 8D is on the left. Overflow parking is available on the street.

WINSTON-SALEM
1540 Westbrook Plaza Drive, Suite 103
Winston-Salem, NC 27103

From Interstate 40, exit 189, Stratford Road proceed north (left) approximately 100 yards. Turn left on Westbrook Plaza Drive. Turn left at four-way stop, continuing on to Westbrook Plaza Drive. Go through next traffic light. The test center is approximately 1/4 mile past the light and on your left.

REPORTING TO THE EXAMINATION SITE

On the day of the examination, you should arrive 30 minutes before your appointment. This extra time is for sign-in, identification, and familiarizing you with the examination process. *If you arrive late, you may not be admitted to the examination site and you will forfeit your examination registration fee.*

REQUIRED IDENTIFICATION

Candidates must register for the exam with their LEGAL first and last name as it appears on their government issued identification. All required identification below must match the first and last name under which the candidate is registered. Candidates are required to bring two (2) forms of valid (non-expired) signature bearing identification to the test site. If the candidate fails to bring proper identification or the candidate names do not match, the candidate will not be allowed to test and their examination fee will not be refunded.

PRIMARY IDENTIFICATION

- State issued driver's license
- State issued identification card
- US Government Issued Passport
- US Government Issued Military Identification Card
- US Government Issued Alien Registration Card

SECONDARY IDENTIFICATION

- Credit Card (must be signed)
- Social Security Card
- US issued Birth Certificate with Raised Seal
  *NOTE: Student ID and employment ID are **NOT** acceptable forms of identification.

SECURITY PROCEDURES

The following security procedures apply during examinations:

- No children, notes, books, briefcases, backpacks, hats, cellular telephones, or pagers are allowed in the examination area. (Note: There is no space to store these materials at the examination center.) Small purses (size of a wallet) will be permitted. Larger purses cannot be taken to the candidate's seat.
- No smoking, eating, or drinking is allowed in the examination center.
- Once you have been seated and the examination begins, you may leave the examination center only to use the restroom, and only after obtaining permission from the proctor. You will not receive extra time to complete the examination.
- Any candidate seen giving or receiving assistance, found with unauthorized materials, or who violates any security regulations will be asked to surrender all examination materials and to leave the examination center. All such instances will be reported to the Board and you may be denied licensure.
- Copying or communicating examination content is a violation of security regulations and may result in the cancellation of your examination results or legal action taken under copyright laws.

TAKING THE EXAMINATION BY COMPUTER

The examination will be administered via computer. You will be using a mouse and computer keyboard.

IDENTIFICATION SCREEN

You will be directed to a semiprivate testing station to take the examination. When you are seated at the testing station, you will be prompted to confirm your name, identification number, and the examination for which you are registered.

TUTORIAL

Before you start your examination, an introductory tutorial is provided on the computer screen. The time you spend on this tutorial, up to 15 minutes, DOES NOT count as part of your examination time.

Sample questions are included following the tutorial so that you may practice answering questions, and reviewing your answers.

TEST QUESTION SCREEN

The "function bar" at the top of the test question screen provides mouse-click access to the features available while taking the examination.

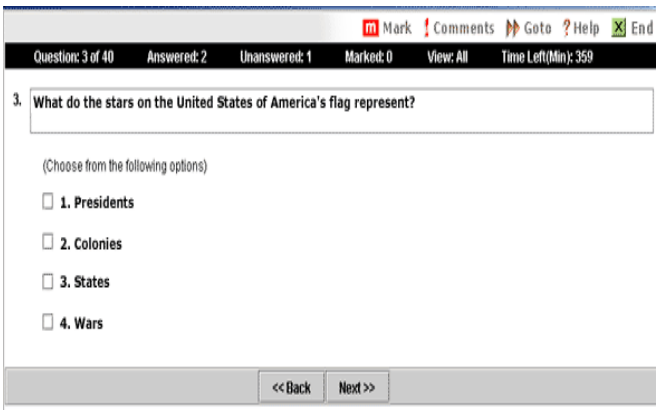

One question appears on the screen at a time. During the examination, minutes remaining will be displayed at the top of the screen and updated as you record your answers.

IMPORTANT: After you have entered your responses, you will later be able to return to any question(s) and change your response, provided the examination time has not run out or you have ended your examination.

EXAMINATION REVIEW

Your examination information will be on file in the Board's office for twelve (12) months immediately following your examination date. During this time, you will have the privilege of reviewing your examination **ONLY ONCE**. If you wish to review your examination, you must make your request to the Board in writing and you will then be notified by letter of the date and location of your examination review.

SCORE REPORTING

The Board has set its passing score for each examination to represent a minimally acceptable level of performance. Passing scores are determined by procedures that identify a level of examination performance that the Board believes necessary if licensees are to practice safely and effectively. Currently, the passing score for all examinations is 70%, meaning that you must correctly answer at least 70% of all officially scored questions on the examination you take.

Your score will be given to you immediately following completion of the examination. The following summary describes the score reporting process:

- **On screen** – your score will appear immediately on the computer screen. This will happen automatically at the end of the time allowed for the examination;
  - If you **pass**, you will immediately receive a successful notification.
  - If you **do not pass**, you will receive a diagnostic report indicating your strengths and weaknesses by examination type with the score report.
- **On paper** – an unofficial score report will be printed at the examination site.

If you pass the examination, you will immediately receive your Score Report, certificate, and photo-bearing wallet identification. The passing Score Report will instruct you to contact the Board for your licensing options. Until you have qualified by examination and obtained a license from the Board, it is unlawful for you to engage or offer to engage in the business of electrical contracting in the State of North Carolina as defined in North Carolina General Statute 87-43.

You may request a duplicate score report after your examination by emailing scorereport@psionline.com or call 800-733-9267.

TIPS FOR PREPARING FOR YOUR LICENSE EXAMINATION

The following suggestions will help you prepare for your examination.

- Only consider the actual information given in the question, do not read into the question by considering other possibilities.
- Planned preparation increases your likelihood of passing.
- Start with a current copy of this Candidate Information Bulletin and use the examination content outline as the basis of your study.
- Read study materials that cover all the topics in the content outline.
- Take notes on what you study. Putting information in writing helps you commit it to memory and it is also an excellent business practice.
- Discuss new terms or concepts as frequently as you can with colleagues. This will test your understanding and reinforce ideas.
- Your studies will be most effective if you study frequently, for periods of about 45 to 60 minutes. Concentration tends to wander when you study for longer periods of time.

FRACTIONS OF AN AMPERE

Except where the computations result in a major fraction of an ampere (.5 or larger), such fractions may be dropped.

EXAMPLES

- 99.5 amperes = 100 amperes (.5 is a major fraction, therefore you rounded upward)
- 99.4 amperes = 99 amperes (.4 is not a major fraction, therefore you dropped the fraction and rounded downward)

EXCEPTIONS TO A STANDARD PROCEDURE

In certain areas the NEC stipulates a standard procedure that should be followed in normal circumstances, but permits alternative procedure(s) or exception(s) in some circumstances. **IF THE QUESTION DOES NOT SPECIFICALLY EXCLUDE THE ALTERNATIVE PROCEDURE(S) OR EXCEPTION(S) PERMITTED BY THE NEC, THE EXAMINEE SHOULD APPLY THESE PROVISIONS OF THE NEC.**

REFERENCE MATERIALS

It is recommended that the applicant study the following materials in preparing for the examination:

1. The National Electrical Code, current edition, which may be obtained from the National Fire Protection Association, Batterymarch Park, Quincy, MA 02269 (telephone: (800) 344-3555).
2. Laws applicable to electrical contractors in North Carolina (General Statutes, Chapter 87, Article 4) and the Board's Rules (Title 21, North Carolina Administrative Code, Chapter 18B) for the Implementation of the Electrical Contractors Licensing Laws in North Carolina, included in this information handbook;
3. Lighting and Power Plans (LIMITED, INTERMEDIATE, AND UNLIMITED classifications only), (see *back of bulletin*).
4. NASCLA Contractors Guide to Business, Law and Project Management - North Carolina Electrical Contractors' Edition, which may be purchased from NASCLA, 23309 North 17th Drive, Building 1, Unit 110, Phoenix, Arizona 85027, Telephone: 866-948-3363 and
5. National Fire Alarm Code, current edition,(Limited, Intermediate, Unlimited, SP-SFD and SP-FA/LV) which may be obtained from the National Fire Protection Association, Batterymarch Park, Quincy, MA 02269 (telephone: (800) 344-3555).

SCOPE OF SUBJECT MATTER FOR ELECTRICAL CONTRACTING LICENSE EXAMINATIONS

Each examination question is designed to test one particular point of the subject matter. The wording is straightforward and there is no intent to mislead or present "trick" questions. A question may be phrased so that some of the aspects of the point being tested have been left out.

Preparing for the Examination: All Classifications
Each question has only one correct answer, although some answers may be partially correct. Therefore, you should read each question and answer thoroughly and then select the one answer that appears to be the most complete and correct answer to the question.

The approximate subject matter covered in each of the ten (10) electrical contracting license examinations is shown in the following *Scope of Subject Matter for Electrical Contracting License Examinations*. Applicants for the INTERMEDIATE and UNLIMITED examinations should note the increased areas of coverage for those respective examinations and that the difficulty level of the questions in their examinations will be higher.

Note: *For each of the ten (10) classifications, an asterisk (*) listed beside a topic indicates that the topic will be covered on the examination. A hyphen (-) indicates that the topic will not be covered on the examination.*

SUBJECT MATTER FOR ELECTRICAL CONTRACTING LICENSE EXAMINATIONS	LIM	INT	UNL	SP-SFD	SP-FA/LV
1. BONDING AND GROUNDING					
a. Systems and equipment requiring grounding and ground-fault protection	*	*	*	*	*
b. Location of connection and required interconnections	*	*	*	*	*
c. Grounded, grounding, and grounding electrode conductors					
(1) Conductor identification and color coding	*	*	*	*	*
(2) Sizing					
(a) Bonding jumpers	*	*	*	*	*
(b) Grounding electrode conductors	*	*	*	*	-
(c) Equipment grounding conductors	*	*	*	*	*
(d) Grounding electrodes	*	*	*	*	-
d. Methods of grounding and bonding, equipment and conductor specifications					
(1) Low-voltage specifications	*	*	*	*	*
(2) High-voltage specifications	-	*	*	-	-
e. Bonding conductor connections	*	*	*	*	*
f. Bonding/bonding grid	*	*	*	*	-
g. Termination	*	*	*	*	*
APPROXIMATE NUMBER OF QUESTIONS	10	11	11	5	4
2. OVERCURRENT PROTECTION					
a. Location in circuit	*	*	*	*	-
b. Sizing requirements	*	*	*	*	-
c. Circuit breakers	*	*	*	*	-
d. Plug and cartridge fuses	*	*	*	*	-
e. Enclosures and locations	*	*	*	*	-
f. High-voltage	-	*	*	-	-
APPROXIMATE NUMBER OF QUESTIONS	9	9	9	4	0
3. WIRING METHODS AND TERMINATIONS					
a. Raceway systems					
(1) Permitted applications and usages	*	*	*	*	*
(2) Characteristics	*	*	*	*	*
(3) Conduit and wireway fill	*	*	*	*	*
b. Cable systems					
(1) Permitted applications and usages	*	*	*	*	*
(2) Characteristics	*	*	*	*	*
(3) Protection from damage	*	*	*	*	*
(4) Traveling cables and controls	-	*	*	-	*
c. Conductors					
(1) Permitted usages and ampacity ratings	*	*	*	*	*
(2) Characteristics	*	*	*	*	*
(3) Miscellaneous	*	*	*	*	*
(4) Outdoors	*	*	*	*	*
d. Switchboards, panelboards, switches, and cabinets	*	*	*	*	-
e. Special conditions	*	*	*	*	-
f. High-voltage	-	*	*	-	-
APPROXIMATE NUMBER OF QUESTIONS	10	10	10	3	9

SUBJECT MATTER FOR ELECTRICAL CONTRACTING LICENSE EXAMINATIONS	LIM	INT	UNL	SP-SFD	SP-FA/LV
4. BOXES AND FITTINGS					
a. General information	*	*	*	*	*
b. Sizing requirements	*	*	*	*	*
APPROXIMATE NUMBER OF QUESTIONS	8	7	7	4	3
5. SERVICE ENTRANCE AND EQUIPMENT					
a. Installation requirements	*	*	*	*	-
b. Service equipment	*	*	*	*	-
c. General sizing requirements	*	*	*	*	-
APPROXIMATE NUMBER OF QUESTIONS	11	9	9	4	0
6. MOTORS AND CONTROL WIRING					
a. General information	*	*	*	*	*
b. Branch circuit and feeder ampacity	*	*	*	*	-
c. Overload protection	*	*	*	*	-
d. Short-circuit and ground-fault protection	*	*	*	*	-
e. Disconnects/controllers	*	*	*	*	-
(1) Size	*	*	*	*	-
(2) Type	*	*	*	*	-
(3) Location	*	*	*	*	-
f. Separation of conductors	*	*	*	*	*
APPROXIMATE NUMBER OF QUESTIONS	7	8	9	2	3
7. SPECIAL OCCUPANCIES AND HAZARDOUS LOCATIONS					
a. Special occupancies					
(1) Emergency systems	-	*	*	-	-
(2) Health care facilities	-	*	*	-	-
(3) Mobile homes and mobile home parks	*	*	*	*	-
(4) Places of assembly, theaters, and similar locations	-	*	*	-	-
(5) Swimming pools	*	*	*	*	-
(a) Underwater lighting fixtures	*	*	*	*	-
b. Hazardous locations				-	-
(1) General requirements	-	*	*	-	-
(2) Specific requirements				-	-
(a) Aircraft hangars	-	-	*	-	-
(b) Bulk storage plants	-	*	*	-	-
(c) Finishing processes	-	*	*	-	-
(d) Gas stations and commercial garages	-	*	*	-	-
APPROXIMATE NUMBER OF QUESTIONS	6	9	9	1	0
8. LOAD CALCULATIONS					
a. Branch circuits	*	*	*	*	-
b. Total computed load	*	*	*	*	-
c. Conductor ampacity requirements	*	*	*	*	*
d. Overcurrent protective device sizing					
(1) Low-voltage	*	*	*	*	*
(2) High-voltage	-	*	*	-	-
APPROXIMATE NUMBER OF QUESTIONS	11	11	11	4	4
9. APPLIANCES, EQUIPMENT, AND LIGHTING					
a. Air conditioners	*	*	*	*	-
b. Residential, commercial, and industrial equipment	*	*	*	*	-
c. Lighting fixtures	*	*	*	*	-
d. Space heating equipment and boilers	*	*	*	*	-
e. Transformers	*	*	*	*	-
f. Machine room	-	*	*	-	-
APPROXIMATE NUMBER OF QUESTIONS	7	7	7	3	0
10. GENERAL					
a. Definitions	*	*	*	*	*
b. Installation requirements	*	*	*	*	*
APPROXIMATE NUMBER OF QUESTIONS	3	3	3	2	6

SUBJECT MATTER FOR ELECTRICAL CONTRACTING LICENSE EXAMINATIONS	LIM	INT	UNL	SP-SFD	SP-FA/LV
11. LAWS, RULES, BASIC BUSINESS PRACTICES, AND PRACTICAL APPLICATIONS					
a. Electrical Contractors Licensing Law (General Statutes Chapter 87, Article 4)	*	*	*	*	*
b. Board's Rules for the Implementation of the Electrical Contractors Licensing Law (Title 21, North Carolina Administrative Code, Chapter 18B)	*	*	*	*	*
c. NASCLA Contractors' Guide to Business, Law and Project Management - North Carolina Electrical Edition	*	*	*	*	*
d. Lighting and Power Plans; Estimating and General Knowledge	*	*	*	-	-
e. National Fire Alarm Code	*	*	*	*	*
APPROXIMATE NUMBER OF QUESTIONS	18	16	15	8	21
TOTAL NUMBER OF QUESTIONS	**100**	**100**	**100**	**40**	**50**

SUBJECT MATTER FOR SPECIAL RESTRICTED ELECTRICAL CONTRACTING LICENSE EXAMINATIONS	SP-PH	SP-ES	SP-EL	SP-WP	SP-SP
1. BONDING AND GROUNDING					
a. Systems and equipment requiring grounding and ground-fault protection	*	*	*	*	*
b. Location of connection and required interconnections	*	*	*	*	*
c. Grounded, grounding, and grounding electrode conductors	*	*	*	*	-
(1) Conductor identification and color coding	*	*	*	*	-
(2) Sizing					
(a) Bonding jumpers	*	*	*	*	*
(b) Equipment grounding conductors	*	*	*	*	*
d. Methods of grounding and bonding, equipment and conductor specifications	*	*	*	*	*
(1) Low-voltage specifications	*	*	*	-	-
e. Bonding conductor connections	*	*	*	*	*
f. Bonding/bonding grid	*	-	*	-	*
g. Termination	*	*	*	*	*
APPROXIMATE NUMBER OF QUESTIONS	4	5	5	7	7
2. OVERCURRENT PROTECTION					
a. Location in circuit	*	*	*	*	-
b. Sizing requirements	*	*	*	*	-
c. Circuit breakers	*	*	*	*	-
d. Plug and cartridge fuses	*	*	*	*	-
e. Enclosures and locations	*	*	*	-	-
APPROXIMATE NUMBER OF QUESTIONS	5	4	4	3	0
3. WIRING METHODS AND TERMINATIONS					
a. Raceway systems					
(1) Permitted applications and usages	*	*	*	*	-
(2) Characteristics	*	-	*	*	-
(3) Conduit and wireway fill	*	*	*	-	-
b. Cable systems					-
(1) Permitted applications and usages	*	*	*	*	-
(2) Characteristics	*	*	*	*	-
(3) Protection from damage	*	*	*	*	-
(4) Traveling cables and controls	-	-	*	-	-
c. Conductors					-
(1) Permitted usages and ampacity ratings	*	*	*	*	-
(2) Characteristics	*	*	*	*	-
(3) Miscellaneous	*	-	-	*	-
(4) Outdoors	-	*	-	*	-
d. Switchboards, panelboards, switches, and cabinets	-	-	*	-	-
APPROXIMATE NUMBER OF QUESTIONS	8	8	10	9	0
4. BOXES AND FITTINGS					
a. General information	*	*	*	*	*
b. Sizing requirements	*	*	*	*	*
APPROXIMATE NUMBER OF QUESTIONS	2	2	2	3	3
5. SERVICE ENTRANCE AND EQUIPMENT					
a. Installation requirements	-	-	-	-	-
b. Service equipment	-	-	-	-	-
c. General sizing requirements	-	-	-	-	-
APPROXIMATE NUMBER OF QUESTIONS	0	0	0	0	0

SUBJECT MATTER FOR SPECIAL RESTRICTED ELECTRICAL CONTRACTING LICENSE EXAMINATIONS	SP-PH	SP-ES	SP-EL	SP-WP	SP-SP
6. MOTORS AND CONTROL WIRING					
a. General information	*	-	*	*	-
b. Branch circuit and feeder ampacity	*	-	*	*	-
c. Overload protection	*	-	*	*	-
d. Short-circuit and ground-fault protection	*	-	*	*	-
e. Disconnects/controllers	*	-	-	*	-
(1) Size	*	-	*	-	-
(2) Type	*	-	-	*	-
(3) Location	*	-	*	*	-
f. Separation of conductors	*	-	*	*	-
APPROXIMATE NUMBER OF QUESTIONS	5	0	5	5	0
7. SPECIAL OCCUPANCIES AND HAZARDOUS LOCATIONS					
a. Swimming pools	-	-	-	-	*
(1) Underwater lighting fixtures	-	-	-	-	*
(2) Underwater audio equipment	-	-	-	-	*
(3) Forming shells	-	-	-	-	*
APPROXIMATE NUMBER OF QUESTIONS	0	0	0	0	10
8. LOAD CALCULATIONS					
a. Branch circuits	*	-	*	*	-
b. Total computed load	*	-	-	*	-
c. Conductor ampacity requirements	*	*	*	*	-
d. Overcurrent protective device sizing	*	*	*	*	-
(1) Low-voltage	*	-	*	*	-
APPROXIMATE NUMBER OF QUESTIONS	2	3	3	3	0
9. APPLIANCES, EQUIPMENT, AND LIGHTING					
a. Air conditioners	*	-	-	-	-
b. Residential, commercial, and industrial equipment	*	-	-	-	-
c. Space heating equipment and boilers	*	-	-	-	-
d. Transformers	-	*	-	-	-
APPROXIMATE NUMBER OF QUESTIONS	4	4	0	0	0
10. GENERAL					
a. Definitions	*	*	*	*	-
b. Installation requirements	*	*	*	*	-
APPROXIMATE NUMBER OF QUESTIONS	3	7	2	2	0
11. LAWS, RULES, BASIC BUSINESS PRACTICES, AND PRACTICAL APPLICATIONS					
a. Electrical Contractors Licensing Law (General Statutes Chapter 87, Article 4)	*	*	*	*	*
b. Board's Rules for the Implementation of the Electrical Contractors Licensing Law (Title 21, North Carolina Administrative Code, Chapter 18B)	*	*	*	*	*
c. NASCLA Contractors' Guide to Business, Law and Project Management -North Carolina Electrical Edition	*	*	*	*	*
d. Lighting and Power Plans; Estimating and General Knowledge	*	-	-	-	-
e. National Fire Alarm Code	-	-	-	-	-
APPROXIMATE NUMBER OF QUESTIONS	7	7	9	8	5
TOTAL NUMBER OF QUESTIONS	**40**	**40**	**40**	**40**	**25**

The examples beginning on this page are intended to illustrate the type of questions that appear on the **LIMITED, INTERMEDIATE, and UNLIMITED** examinations. The examples can be considered typical examination questions, but these questions will not appear on any of the examinations.

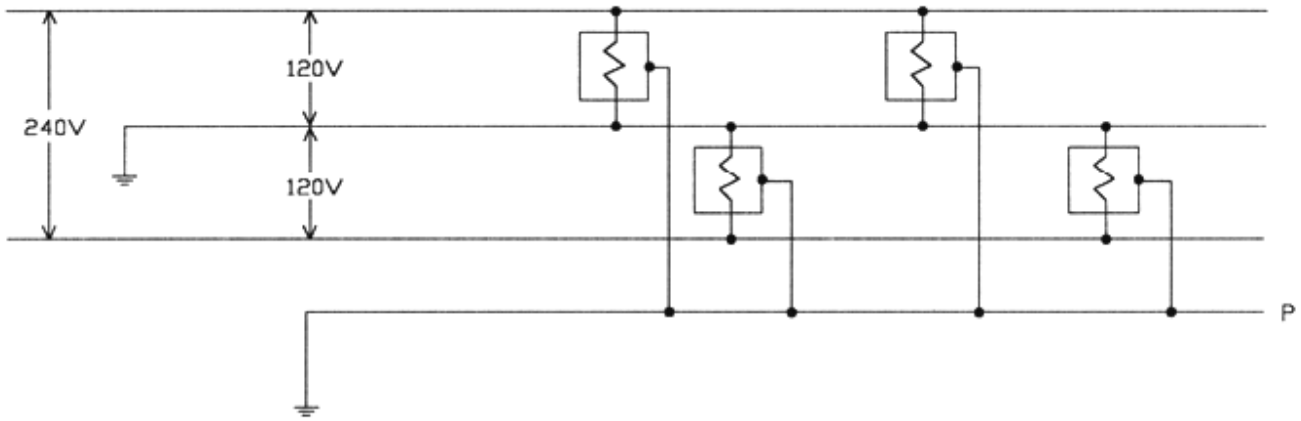

EXAMPLE 1:
In the diagram shown above: Disregarding all exceptions. Conductor "P" shall be identified by which of the following colors?

Ⓐ Ⓑ Ⓒ ●

(A) Gray
(B) White
(C) Black
(D) Green

Here you are asked to select from the listed colors the one that is to be used to identify the equipment grounding conductor of a branch circuit. Since Section 250.119 of the NEC requires that green or green with yellow stripes be the color of insulation used on a grounding conductor (when it is not bare), the correct answer is **(D)**.

EXAMPLE 2:
A circuit leading to a gasoline dispensing pump must have a disconnecting means:

Ⓐ Ⓑ Ⓒ ●

(A) Only in the grounded conductor.
(B) Only in the ungrounded conductors.
(C) Operating independently in all conductors.
(D) Operating simultaneously in all conductors.

Here the "question" is in the form of an incomplete statement. Your task is to select the choice that best completes the statement. In this case, you should have selected **(D)** since section 514.11(A) of the NEC specifies that such a circuit shall be provided with a means to disconnect simultaneously from the source of supply all conductors of the circuit, including the grounded conductor, if any.

EXAMPLE 3:
In existing branch-circuit installations, the grounded conductor of the dryer circuit shall be connected to the equipment grounding conductor of an electric clothes dryer and all of the following conditions must be met **EXCEPT**:

Ⓐ Ⓑ ● Ⓓ

(A) The grounded conductor is not smaller than size 10 AWG copper or size 8 AWG aluminum.
(B) The grounding contacts of the receptacle installed with the dryer are bonded to the dryer.
(C) The supply circuit is a 120/240V, 1Ø, 3-wire circuit derived from a 3Ø, 4-wire delta system.
(D) The grounded conductor is insulated, or if uninsulated and part of a Type SE service-entrance cable, and the branch circuit originates at the service equipment.

Again the "question" is in the form of an incomplete statement and your task is to select the choice that best completes the statement. In this case, you are to find an exception. You have to select the condition that does not have to be met when using the grounded conductor of the circuit to ground the frame of the dryer. You should have selected **(C)** because Section 250-140 of the NEC requires the conditions listed in (A), (B), and (D) but does not require or permit the conditions listed in (C).

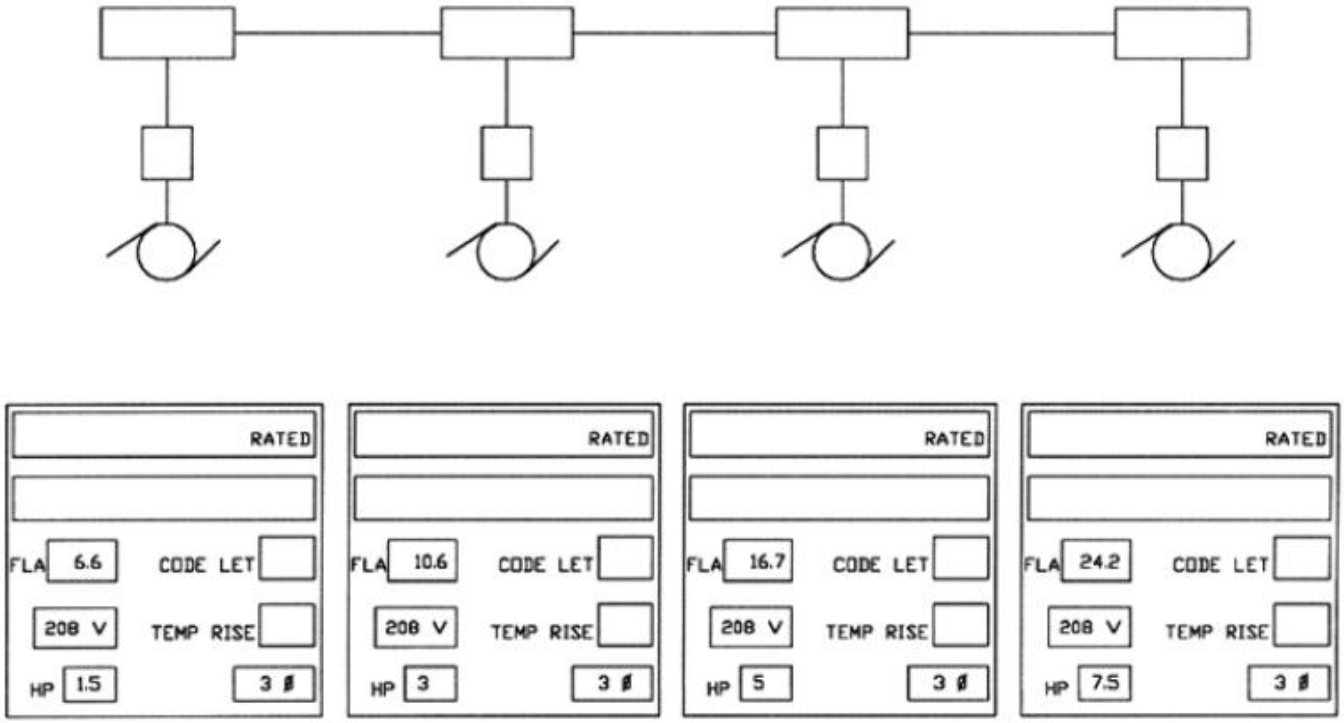

EXAMPLE 4:
In the diagram shown above: Equipment terminations provided are 75°C and Type THW copper conductors in a raceway are used for feeder conductors. Which of the following is the minimum allowable size of the feeder conductors?

(A) ● (C) (D)

(A) 8 AWG
(B) 6 AWG
(C) 4 AWG
(D) 2 AWG

Here you are asked to determine the smallest size of conductors that the NEC will allow for the feeder. Section 430.24 tells you that conductors supplying several motors shall have an ampacity not less than 125 percent of the full-load current rating of the highest rated motor plus the sum of the full-load current rating of all the other motors in the group. In this case, the total is 64 amps. This figure is then referenced to Table 310-16, and according to the table, size 6 AWG, Type THW copper conductor has rated ampacity of 65 amps; therefore, you should have selected **(B)**.

EXAMPLE 5:
Which of the following conditions shall be met to omit overcurrent protection at the tap point for a 20-ft. feeder tap?
I. The tap conductor shall terminate in a panelboard.
II. The ampacity of the tap conductors shall be at least one-half the ampacity of the feeder conductors.

(A) (B) (C) ●

(A) I only
(B) II only
(C) Both I and II
(D) Neither I nor II

Here you are asked to determine which of two conditions are required by the NEC if a contractor omits an overcurrent device at a tap point. Section 240.21(B)(2) of the NEC lists three conditions that are required to be met when tap conductors are utilized in this manner. However, the question asks only about two conditions specifically stated, and since neither of them is included as a condition, you should have selected **(D)**.

PRACTICE QUESTIONS FOR LIMITED, INTERMEDIATE AND UNLIMITED EXAMINATIONS

Try to answer the practice questions that follow. Questions one (1) through thirty (30) are practice questions that are intended to illustrate the type of questions that appear on the examinations. Mark your answers on the **ANSWER SHEET FOR PRACTICE QUESTIONS**, which appears below. After you have answered all of the questions, compare the answers you have marked on the answer sheet with those given on the last page of practice questions in this bulletin. If you have difficulty with certain questions, you may wish to review that subject area before you take the examination.

PRACTICE QUESTIONS FOR SPECIAL RESTRICTED EXAMINATIONS
SINGLE FAMILY DETACHED RESIDENTIAL DWELLING (SP-SFD), FIRE ALARM/LOW VOLTAGE (FALV), PLUMBING AND HEATING (SP-PH), ELECTRIC SIGN (SP-ES), ELEVATOR (SP-EL), GROUND WATER PUMP (SP-WP), AND SWIMMING POOL BONDING (SP-SP).

Questions thirty-one (31) through fifty-six (56) are practice questions that are intended to illustrate the type of questions that appear on the SPECIAL RESTRICTED EXAMINATIONS. Mark your answers on the **ANSWER SHEET FOR PRACTICE QUESTIONS**, which appears below. After you have answered all of the questions, compare the answers you have marked on the answer sheet with those given on the last page of practice questions in this bulletin. If you have difficulty with certain questions, you may wish to review that subject area before you take the examination.

DIRECTIONS FOR ANSWERING THE PRACTICE QUESTIONS
Each question or incomplete statement is followed by four (4) suggested answers. In each case, select the **ONE** that best answers the question or completes the statement and then blacken the corresponding space on the **ANSWER SHEET FOR PRACTICE QUESTIONS**

ANSWER SHEET FOR PRACTICE QUESTIONS

1. Ⓐ Ⓑ Ⓒ Ⓓ	11. Ⓐ Ⓑ Ⓒ Ⓓ	21. Ⓐ Ⓑ Ⓒ Ⓓ	31. Ⓐ Ⓑ Ⓒ Ⓓ	41. Ⓐ Ⓑ Ⓒ Ⓓ	51. Ⓐ Ⓑ Ⓒ Ⓓ
2. Ⓐ Ⓑ Ⓒ Ⓓ	12. Ⓐ Ⓑ Ⓒ Ⓓ	22. Ⓐ Ⓑ Ⓒ Ⓓ	32. Ⓐ Ⓑ Ⓒ Ⓓ	42. Ⓐ Ⓑ Ⓒ Ⓓ	52. Ⓐ Ⓑ Ⓒ Ⓓ
3. Ⓐ Ⓑ Ⓒ Ⓓ	13. Ⓐ Ⓑ Ⓒ Ⓓ	23. Ⓐ Ⓑ Ⓒ Ⓓ	33. Ⓐ Ⓑ Ⓒ Ⓓ	43. Ⓐ Ⓑ Ⓒ Ⓓ	53. Ⓐ Ⓑ Ⓒ Ⓓ
4. Ⓐ Ⓑ Ⓒ Ⓓ	14. Ⓐ Ⓑ Ⓒ Ⓓ	24. Ⓐ Ⓑ Ⓒ Ⓓ	34. Ⓐ Ⓑ Ⓒ Ⓓ	44. Ⓐ Ⓑ Ⓒ Ⓓ	54. Ⓐ Ⓑ Ⓒ Ⓓ
5. Ⓐ Ⓑ Ⓒ Ⓓ	15. Ⓐ Ⓑ Ⓒ Ⓓ	25. Ⓐ Ⓑ Ⓒ Ⓓ	35. Ⓐ Ⓑ Ⓒ Ⓓ	45. Ⓐ Ⓑ Ⓒ Ⓓ	55. Ⓐ Ⓑ Ⓒ Ⓓ
6. Ⓐ Ⓑ Ⓒ Ⓓ	16. Ⓐ Ⓑ Ⓒ Ⓓ	26. Ⓐ Ⓑ Ⓒ Ⓓ	36. Ⓐ Ⓑ Ⓒ Ⓓ	46. Ⓐ Ⓑ Ⓒ Ⓓ	56. Ⓐ Ⓑ Ⓒ Ⓓ
7. Ⓐ Ⓑ Ⓒ Ⓓ	17. Ⓐ Ⓑ Ⓒ Ⓓ	27. Ⓐ Ⓑ Ⓒ Ⓓ	37. Ⓐ Ⓑ Ⓒ Ⓓ	47. Ⓐ Ⓑ Ⓒ Ⓓ	
8. Ⓐ Ⓑ Ⓒ Ⓓ	18. Ⓐ Ⓑ Ⓒ Ⓓ	28. Ⓐ Ⓑ Ⓒ Ⓓ	38. Ⓐ Ⓑ Ⓒ Ⓓ	48. Ⓐ Ⓑ Ⓒ Ⓓ	
9. Ⓐ Ⓑ Ⓒ Ⓓ	19. Ⓐ Ⓑ Ⓒ Ⓓ	29. Ⓐ Ⓑ Ⓒ Ⓓ	39. Ⓐ Ⓑ Ⓒ Ⓓ	49. Ⓐ Ⓑ Ⓒ Ⓓ	
10. Ⓐ Ⓑ Ⓒ Ⓓ	20. Ⓐ Ⓑ Ⓒ Ⓓ	30. Ⓐ Ⓑ Ⓒ Ⓓ	40. Ⓐ Ⓑ Ⓒ Ⓓ	50. Ⓐ Ⓑ Ⓒ Ⓓ	

PRACTICE QUESTIONS: LIMITED, INTERMEDIATE, AND UNLIMITED EXAMINATIONS: QUESTIONS ONE (1) THROUGH THIRTY (30).

Questions one (1) and two (2) are to be answered by using the *Lighting and Power Plans* (see back of bulletin).

1. What type of fluorescent lamps must be supplied?
   (A) Daylight
   (B) Cool white
   (C) Warm white
   (D) Warm white deluxe

2. The total wattage for all lamps supplied by multiwire branch circuit A5, 7 is:
   (A) 480 watts
   (B) 860 watts
   (C) 1340 watts
   (D) 2200 watts

3. A single-family dwelling contains a 200 amp 1Ø main-service panel with 75°C equipment terminations and is being supplied with size 2/0 AWG, Type THW copper conductors in rigid metal conduit. The minimum allowable size of the bonding jumper for this service-entrance conduit is:
   (A) 6 AWG aluminum
   (B) 6 AWG copper
   (C) 4 AWG aluminum
   (D) 4 AWG copper

4. Which of the following statements about supplementary overcurrent protection is correct?
   (A) It shall be readily accessible.
   (B) It shall not be used in luminaries.
   (C) It may be used to protect internal circuits of equipment.
   (D) It may be used as a substitute for a branch-circuit overcurrent device.

5. Disregarding all exceptions. Which of the following statements about Type MI cable is correct?
   (A) It may be used in any hazardous location.
   (B) It shall not be used where exposed to oil and gasoline.
   (C) It shall be securely supported at intervals not exceeding 10 ft.
   (D) A single run of cable shall not contain more than the equivalent of 4 quarter bends.

6. Which of the following statements about the protection of nonmetallic-sheathed cable from physical damage is/are correct?
   I. When run across the top of floor joists in an accessible attic, the cable shall be protected by approved guard strips.
   II. When passing through a floor, the cable could be enclosed in Schedule 40 PVC rigid nonmetallic conduit extending at least 6 in. above the floor.
   (A) I only
   (B) II only
   (C) Both I and II
   (D) Neither I nor II

7. The maximum allowable ampacity of each of three-(3) single insulated 75°C rated size 6 AWG copper conductors in a raceway is:
   (A) 55 amps
   (B) 65 amps
   (C) 70 amps
   (D) 80 amps

8. Which of the following statements about an enclosed type single-throw knife switch is/are correct?
   I. The switch shall be placed so that gravity will not tend to close the blades.
   II. A switch approved for inverted mounting shall be provided with a locking device that will ensure that the blades remain in the open position when so set.
   (A) I only
   (B) II only
   (C) Both I and II
   (D) Neither I nor II

9. Which of the following statements about a size 2 AWG, Type THHN copper conductor is correct?
   (A) It has nylon insulation.
   (B) Its area is .067 square inches.
   (C) Its maximum operating temperature is 90°C.
   (D) It has a standard DC resistance of .266 ohms per 1000 ft.

10. A panelboard without individual protection contains six-(6) 3-pole circuit breakers and eight-(8) 2-pole circuit breakers. The maximum number of single-pole circuit breakers permitted to be added in this panelboard is:
    (A) 8
    (B) 16
    (C) 28
    (D) 42

11. A metal device box contains cable clamps, six-(6) size 14 AWG conductors, and one-(1) single-pole switch. What is the minimum allowable size of the box?
    (A) 12 cu. in.
    (B) 13 1/2 cu. in.
    (C) 14 1/4 cu. in.
    (D) 18 cu. in.

12. A 120/240V, 3-wire service-drop passing over a residential driveway shall have a minimum height above grade of:
    (A) 10 ft.
    (B) 12 ft.
    (C) 15 ft.
    (D) 18 ft.

13. Which of the following statements about 120/240V, 3-wire service-entrance conductors for a one-family dwelling is/are correct?
    I. The service disconnecting means shall have a rating of not less than 100 amperes, 3-wire.
    II. Service conductors shall be permitted to be connected to the service disconnecting means by connections that depend on solder.
    (A) I only
    (B) II only
    (C) Both I and II
    (D) Neither I nor II

14. Which of the following may be used as a feeder from the service equipment to a mobile home?
    I. A permanently installed feeder.
    II. One 50-ampere power-supply cord.
    (A) I only
    (B) II only
    (C) Either I or II
    (D) Neither I nor II

15. Which of the following statements about the inspection of electrical work is/are correct?
    I. Inspectors shall make as many inspections as are necessary to insure compliance with applicable laws.
    II. An inspector shall issue a certificate of compliance when the completed electrical installation complies with all applicable laws and with the terms of the permit.
    (A) I only
    (B) II only
    (C) Both I and II
    (D) Neither I nor II

16. A 208V, 50 hp, 3Ø squirrel-cage motor has a full-load current rating of:
    (A) 130 amps
    (B) 143 amps
    (C) 162 amps
    (D) 195 amps

17. Which of the following is the maximum allowable rating of a permanently connected appliance where the branch-circuit overcurrent device is used as the appliance disconnecting means?
    (A) 1/8 hp.
    (B) 1/4 hp.
    (C) 1/2 hp.
    (D) 1 hp.

18. A 75 kva transformer has a 480V, 3Ø, 3-wire delta primary and a 208/120V, 3Ø, 4-wire wye secondary and is fed from a 225-amp plug-in bus duct protected by a 225-amp circuit breaker. Primary and secondary overcurrent protection is being required for this installation. Which of the following statements about overcurrent protection for this transformer is/are correct?
    I. It shall have a primary overcurrent device rated at not more than 200 amperes.
    II. It shall be permissible to have a single nonadjustable overcurrent device on the secondary side rated at not more than 300 amperes.
    (A) I only
    (B) II only
    (C) Both I and II
    (D) Neither I nor II

19. A store building measures 60 ft. by 80 ft. and is supplied by a 240/120V, 3Ø, 4-wire delta system. Which of the following is the minimum allowable number of 2-wire, 20-ampere branch circuits required to supply the general lighting in this building?
    (A) 6
    (B) 7
    (C) 8
    (D) 9

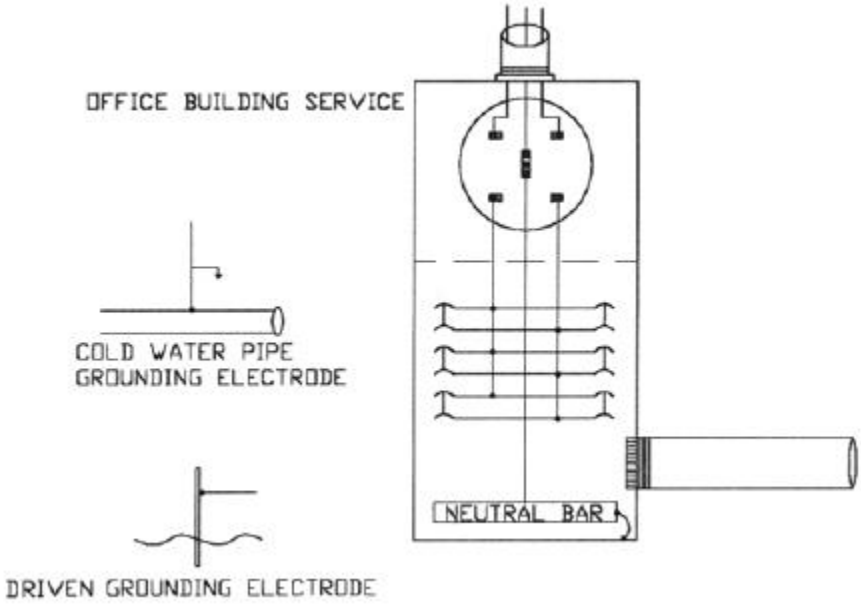

20. In the diagram shown above: The total calculated load for the service is 200 amps for each ungrounded conductor and 60 amps maximum unbalanced load for the grounded conductor. Equipment terminations provided are 75°C and Type THW copper conductors are used. The minimum allowable size of the grounded conductor is:
    (A) 6 AWG
    (B) 4 AWG
    (C) 2/0 AWG
    (D) 3/0 AWG

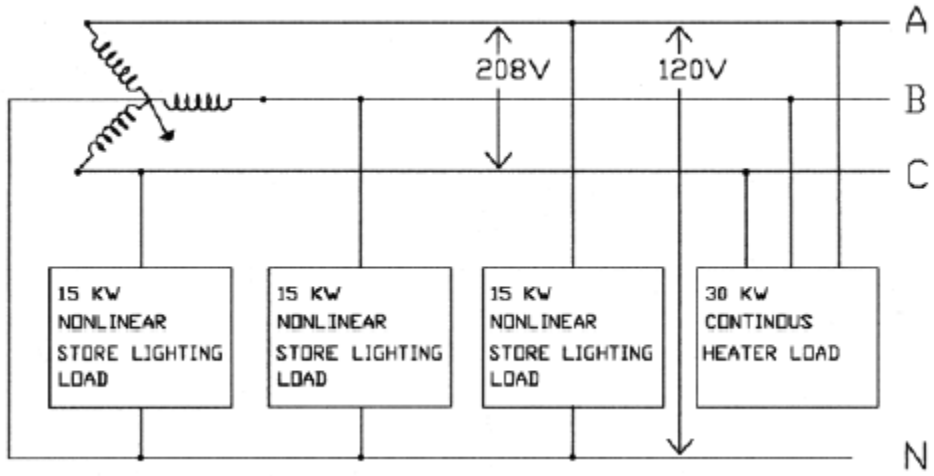

21. In the diagram shown above: The total load that conductor A is supplying in the feeder is:
    (A) 208 amps
    (B) 216 amps
    (C) 260 amps
    (D) 270 amps

22. The minimum standard size fuse required to protect conductor A in the feeder shown above question #21 is:
    (A) 200 amps
    (B) 225 amps
    (C) 250 amps
    (D) 300 amps

23. Equipment terminations provided are 75°C and Type THHN copper conductors in conduit are to be used. The minimum allowable size of the ungrounded conductors in the feeder shown above question #21 is:
    (A) 4/0 AWG
    (B) 250 kcmil
    (C) 300 kcmil
    (D) 350 kcmil

24. In dwelling units, ground-fault circuit-interrupter protection is required in all of the following locations **EXCEPT**:
    (A) Garages
    (B) Outdoors
    (C) Bedrooms
    (D) Bathrooms

25. In noncombustible walls or ceilings, the front edge of an outlet box may be set back of the finished surface not more than:
    (A) 1/8 in.
    (B) 1/4 in.
    (C) 1/2 in.
    (D) 3/4 in.

26. The rating of any one cord-and plug-connected utilization equipment on a 120V, 15-ampere branch-circuit which has only one outlet shall not exceed:
    (A) 12 amps
    (B) 15 amps
    (C) 16 amps
    (D) 20 amps

27. The total rating of a cord-and-attachment-plug-connected room air conditioner connected to a 20-ampere branch-circuit that does not employ interlocking circuitry to prevent simultaneous operation of lighting outlets of the same circuit shall not exceed:
    (A) 10 amps
    (B) 15 amps
    (C) 16 amps
    (D) 20 amps

28. Which of the following statements about the mounting of electric equipment is/are correct?
    I. Electric equipment shall be firmly secured to the surface on which it is mounted.
    II. Wooden plugs driven into holes in masonry, concrete, plaster, or similar materials shall not be used.
    (A) I only
    (B) II only
    (C) Both I and II
    (D) Neither I nor II

29. A 240V, 1Ø, 21.85 KW commercial cooking appliance is to be supplied by Type TW copper branch circuit conductors. Which of the following is the minimum allowable size of the conductors?
    (A) 3 AWG
    (B) 2 AWG
    (C) 1 AWG
    (D) 1/0 AWG

30. A 230V, 5HP, 3Ø squirrel-cage motor has a full-load current rating of 15.2 amperes. The standard rating of a dual element (time-delay) fuse used to provide branch-circuit short-circuit and ground-fault protection shall be permitted to be:
    (A) 20 amps
    (B) 25 amps
    (C) 30 amps
    (D) 35 amps

PRACTICE QUESTIONS: SPECIAL RESTRICTED EXAMINATIONS (ALL CLASSIFICATIONS): QUESTIONS THIRTY-ONE (31) THROUGH FIFTY-SIX (56)

Special Restricted Single Family Detached Residential Dwelling (SP-SFD) (Questions 31, 32, 33, and 34)

31. A 240V, 1Ø branch-circuit will supply an electric furnace that has elements rated at 12 kva and a motor rated at 1.5 kva. Equipment terminations provided are 75°C and Type THW copper conductors are to be used. What is the minimum allowable size of the branch-circuit conductors?
    (A) 6 AWG
    (B) 4 AWG
    (C) 2 AWG
    (D) 1 AWG

32. A branch circuit is supplying a single hermetic refrigerant motor-compressor for an air conditioning unit. The hermetic refrigerant motor-compressor rated-load current is 18 amperes. If a 30-ampere fuse will not start the motor-compressor, the maximum rating of the branch-circuit short-circuit and ground-fault protective device may be increased to:
    (A) 35 amps
    (B) 40 amps
    (C) 45 amps
    (D) 50 amps

33. The minimum number of 120V, 15-ampere, 2-wire lighting branch-circuits required for a residence 70 ft. by 30 ft. is:
    (A) 2
    (B) 3
    (C) 4
    (D) 5

34. An individual 20-ampere rated branch-circuit serves a single receptacle. The rating of the receptacle must not be less than:
    (A) 12 amps
    (B) 15 amps
    (C) 16 amps
    (D) 20 amps

SPECIAL RESTRICTED FIRE ALARM/LOW VOLTAGE (FALV) (QUESTIONS 35, 36, 37, AND 38)

35. The maximum allowable ampacity of size 18 AWG conductors suitable for a fire protection system is:
    (A) 6 amps
    (B) 8 amps
    (C) 14 amps
    (D) 18 amps

36. Where ceiling heights allow, wall-mounted fire alarm signal devices shall have their tops at heights above the finished floors of not less than:
    (A) 48 in.
    (B) 60 in.
    (C) 72 in.
    (D) 90 in.

37. A metal box with cable clamps contains two-(2) size 14 AWG, two conductor nonmetallic-sheathed cables with an equipment grounding conductor. Which of the following is the minimum allowable capacity of the box?
    (A) 12 cu. in.
    (B) 14 cu. in.
    (C) 16 cu. in.
    (D) 18 cu. in.

38. The rating of the branch circuit overcurrent device supplying a low voltage wiring system is fifteen (15) amperes. The minimum allowable size equipment grounding conductor required for this dedicated circuit is:
    (A) 14 AWG copper
    (B) 14 AWG aluminum
    (C) 12 AWG copper
    (D) 10 AWG aluminum

SPECIAL RESTRICTED PLUMBING AND HEATING (SP-PH) (QUESTIONS 39, 40, 41, AND 42)

39. Disregarding all exceptions. All phase conductors and, where used, the grounded conductor and all equipment conductors of an alternating current circuit shall be grouped together when installed in metal raceways as to avoid heating caused by:
    I. Ampacity
    II. Induction
    (A) I only
    (B) II only
    (C) Both I and II
    (D) Neither I nor II

40. The minimum size liquid tight flexible metal conduit is:
    (A) 3/8 in.
    (B) 1/2 in.
    (C) 3/4 in.
    (D) 1 in.

41. A load is considered to be continuous if the maximum current is expected to continue for:
    (A) 1/2 hour
    (B) 1 hour
    (C) 2 hours
    (D) 3 hours

42. The maximum length of a flexible cord identified as suitable for the purpose of connecting a built-in dishwasher shall be:
    (A) 2 ft.
    (B) 3 ft.
    (C) 4 ft.
    (D) 5 ft.

SPECIAL RESTRICTED ELECTRIC SIGN (SP-ES) (QUESTIONS 43, 44, 45, AND 46)

43. The minimum allowable trade size of a rigid, PVC conduit, Schedule 40, containing four-(4) size 8 AWG, Type TW copper conductors is:
    (A) 1/2
    (B) 3/4
    (C) 1
    (D) 11/2

44. Type TW insulation has a temperature rating of:
    (A) 60ºC
    (B) 75ºC
    (C) 90ºC
    (D) 110ºC

45. Unless otherwise specifically permitted elsewhere in the NEC, which one of the following is the maximum overcurrent protection for three-(3) size 12 AWG, Type THWN copper conductors installed in a raceway?
    (A) 15 amps
    (B) 20 amps
    (C) 25 amps
    (D) 30 amps

46. Which of the following statements about liquidtight flexible metal conduit is/are correct?
    I. Angle connectors shall not be used for concealed raceway installations.
    II. Liquidtight flexible metal conduit shall not be used where subject to physical damage.
    (A) I only
    (B) II only
    (C) Both I and II
    (D) Neither I nor II

SPECIAL RESTRICTED ELEVATOR (SP-EL) (QUESTIONS 47, 48, 49, AND 50)

47. The full-load current of a 240V direct-current 7 ½ hp motor is:
    (A) 19 amps
    (B) 22 amps
    (C) 29 amps
    (D) 38 amps

48. All of the following are standard ampere ratings for inverse time circuit breakers **EXCEPT**:
    (A) 275
    (B) 300
    (C) 350
    (D) 400

49. A metal outlet device box contains eight-(8) size 12 AWG conductors. Which of the following is the minimum allowable box dimension:
    (A) 4 x 1 1/4 in. square
    (B) 4 x 1 1/2 in. square
    (C) 4 x 2 1/8 in. square
    (D) 4 x 2 1/8 in. octagonal

50. The ampacity of a feeder supplying one-(1) 7 ½ HP-240 volt direct-current motor and one-(1) 10 HP-240 volt direct-current motor shall not be less than:
    (A) 56 amps
    (B) 74 amps
    (C) 77 amps
    (D) 84 amps

SPECIAL RESTRICTED GROUND WATER PUMP (SP-WP) (QUESTIONS 51, 52, 53, AND 54)

51. Motor overload protection devices are intended to protect:
    I. Motors due to overload.
    II. Motors with short circuits or ground faults.
    (A) I only
    (B) II only
    (C) Both I and II
    (D) Neither I nor II

52. An equipment bonding jumper is permitted outside a raceway:
    (A) When not over 5 ft. long.
    (B) When not over 6 ft. long.
    (C) When not over 8 ft. long.
    (D) When not over 10 ft. long.

53. The identification of the terminal intended for connection of the grounded conductor to a polarized receptacle can be identified by a metal or metal coating that is substantially:
    (A) Gold in color.
    (B) White in color.
    (C) Green in color.
    (D) Yellow in color.

54. The maximum allowable ampacity of three-(3) single insulated 75°C rated size 6 AWG copper conductors in a raceway is:
    (A) 55 amps
    (B) 65 amps
    (C) 70 amps
    (D) 80 amps

SPECIAL RESTRICTED SWIMMING POOL BONDING (SP-SP) (QUESTIONS 55 AND 56)

55. Which one of the following is the minimum size conductor permitted to be used for the bonding conductor in a swimming pool installation?
    (A) 10 AWG stranded copper conductor
    (B) 10 AWG solid copper conductor
    (C) 8 AWG solid copper conductor
    (D) 8 AWG stranded copper conductor

56. Which of the following statements about the Board's rules (Title 21 NCAC 18B) is/are correct?
    I. All licensees must notify the Board in writing within 30 days of any change of mailing address and telephone number.
    II. All electrical contracting business, including all business advertising and the submission of all documents and papers, conducted in the state of North Carolina by a licensee of the Board shall be conducted in the exact name in which the electrical contracting license is issued.
    (A) I only
    (B) II only
    (C) Both I and II
    (D) Neither I nor II

ANSWER KEY FOR PRACTICE QUESTIONS

1. B	11. D	21. A	31. B	41. D	51. A
2. C	12. B	22. D	32. B	42. C	52. B
3. D	13. A	23. C	33. C	43. B	53. B
4. C	14. C	24. C	34. D	44. A	54. B
5. A	15. C	25. B	35. A	45. B	55. C
6. A	16. B	26. A	36. D	46. C	56. C
7. B	17. A	27. A	37. A	47. C	
8. C	18. B	28. C	38. A	48. A	
9. C	19. C	29. B	39. B	49. A	
10. A	20. B	30. C	40. A	50. C	

CHAPTER 87 - ARTICLE 4

Electrical Contractors

87-39. Board of Examiners; appointment; terms; chairman; meetings; quorum; principal office; compensation; oath.
87-40. Secretary-treasurer.
87-41. Seal of Board.
87-41.1. Definitions.
87-42. Duties and powers of Board.
87-43. Electrical contracting defined; licenses.
87-43.1. Exceptions.
87-43.2. Issuance of license.
87-43.3. Classification of licenses.
87-43.4. Residential dwelling license.
87-44. Fees; license term.
87-44.1. Continuing education courses required.
87-45. Funds.
87-46. Responsibility of licensee; nonliability of Board.
87-47. Penalties imposed by Board; enforcement procedures.
87-48. Penalty for violation of Article; powers of Board to enjoin violation.
87-49. No examination required of licensed contractors.
87-50. Reciprocity.
87-50.1. Public awareness program.
87-51. Severability of provisions.

87-39. BOARD OF EXAMINERS; APPOINTMENT; TERMS; CHAIRMAN; MEETINGS; QUORUM; PRINCIPAL OFFICE; COMPENSATION; OATH.

(a) The State Board of Examiners of Electrical Contractors shall continue as the State agency responsible for the licensing of persons engaging in electrical contracting within this State, and shall consist of one member from the North Carolina Department of Insurance to be designated by the Commissioner of Insurance; one member who has satisfied the requirements for an unlimited license as defined in G.S. 87-43.3 and who is a representative of the North Carolina Association of Electrical Contractors to be designated by the governing body of that organization; and five members to be appointed by the Governor: one from the faculty of The Greater University of North Carolina who teaches or does research in the field of electrical engineering, one who is serving as a chief electrical inspector of a municipality or county in North Carolina, one who has satisfied the requirements for an unlimited license as defined in G.S. 87-43.3 and who is a representative of the Carolinas Electrical Contractors Association operating a sole proprietorship, partnership or corporation located in North Carolina which is actively engaged in the business of electrical contracting, and two who have no ties with the construction industry and who represent the interest of the public at large.
(b) Members of the Board shall serve staggered seven-year terms. Each member shall serve until his or her successor is designated or appointed, and is duly qualified. Vacancies occurring during a term shall be filled for the remainder of that term by the authority that designated or appointed the departing member.
(c) Members of the Board shall not serve consecutive, complete terms. For purposes of this subsection, only a term of less than seven years that results from the filling of a vacancy is an incomplete term; a term of less than seven years that results from the successor's late designation or appointment is not an incomplete term.
(d) All members shall be residents of North Carolina during their tenure on the Board. Any member of the Board may be removed by the authority that designated or appointed that member for misconduct, incompetency, or neglect of duty.
(e) The Board shall hold regular meetings quarterly and may hold meetings on call of the chair. The chair shall be required to call a special meeting upon written request by two members of the Board. At its regular first quarter meeting, the Board shall elect from its membership a chair and a vice-chair, each to serve for one year. Four members of the Board shall constitute a quorum. The principal office of the Board shall be at such place as shall be designated by a majority of the members thereof. Payment of compensation and reimbursement of expenses of Board members shall be governed by G.S. 93B-5.
(f) Before entering upon the performance of his or her duties hereunder, each member of the Board shall take and file with the Secretary of State an oath in writing to properly perform the duties of his or her office as a member of the Board, and to uphold the Constitution of North Carolina and the Constitution of the United States.

87-40. SECRETARY -TREASURER.

At its regular first quarter meeting, the Board shall appoint a secretary-treasurer to serve for one year. The secretary-treasurer need not be a member of the Board, and the Board is authorized to employ a full-time secretary-treasurer and such other assistants and to make such other expenditures as may be necessary to the proper performance of the duties of the Board under this Article. The compensation and the duties of the secretary-treasurer shall be fixed by the Board, and the secretary-treasurer shall give bond in such sum and form as the Board shall require for the faithful performance of duty. The secretary-treasurer shall keep a record of the proceedings of said Board and shall receive and account for all moneys derived from the operations of the Board under this Article.

87-41. SEAL OF BOARD.

The Board shall adopt a seal for its own use, and the secretary-treasurer shall have charge and custody thereof. The seal shall have inscribed thereon the words "Board of Examiners of Electrical Contractors, State of North Carolina."

87-41.1. DEFINITIONS.
As used in this Article, unless the context requires otherwise:

1) A "qualified individual" is an individual who is qualified in a specific license classification as a result of having taken and passed the qualifying examination required by this Article for such a classification and who has been certified as such by the Board pursuant to G.S. 87-42.
2) A "listed qualified individual" is a qualified individual whose name is listed on a license issued by the Board. A listed qualified individual has the specific duty and authority to supervise and direct electrical contracting done by or in the name of a licensee of the Board on whose license the qualified individual is so listed.
3) A licensee of the Board is a person listed pursuant to subsection (2), or a partnership, firm or corporation that regularly employs at least one listed qualified individual and which has been issued a license by the Board.

87-42. DUTIES AND POWERS OF BOARD.
In order to protect the life, health and property of the public, the State Board of Examiners of Electrical Contractors shall provide for the written examination of all applicants for certification as a qualified individual, as defined in G.S. 87-41.1. The Board shall receive all applications for certification as a qualified individual and all applications for licenses to be issued under this Article, shall examine all applicants to determine that each has met the requirements for certification and shall discharge all duties enumerated in this Article. Applicants for certification as a qualified individual must be at least 18 years of age and shall be required to demonstrate to the satisfaction of the Board their good character and adequate technical and practical knowledge concerning the safe and proper installation of electrical work and equipment. The examination to be given for this purpose shall include, but not be limited to, the appropriate provisions of the National Electrical Code as incorporated in the North Carolina State Building Code, the analysis of electrical plans and specifications, estimating of electrical installations, and the fundamentals of the installation of electrical work and equipment. Certification of qualified individuals shall be issued in the same classifications as provided in this Article for license classifications. The Board shall prescribe the standards of knowledge, experience and proficiency to be required of qualified individuals, which may vary for the various license classifications. The Board shall issue certifications and licenses to all applicants meeting the requirements of this Article and of the Board upon the receipt of the fees prescribed by G.S. 87-44. The Board shall have power to make rules and regulations necessary to the performance of its duties and for the effective implementation of the provisions of this Article. The Board shall have the power to administer oaths and issue subpoenas requiring the attendance of persons and the production of papers and records before the Board in any hearing, investigation, or proceeding conducted by it. Members of the Board's staff or the sheriff or other appropriate official of any county of this State shall serve all notices, subpoenas, and other papers given to them by the Chairman for service in the same manner as process issued by any court of record. Any person who neglects or refuses to obey a subpoena issued by the Board shall be guilty of a Class 1 misdemeanor. The Board shall have the power to acquire, rent, encumber, alienate, and otherwise deal with real property in the same manner as a private person or corporation, subject only to approval of the Governor and the Council of State. Collateral pledged by the Board for an encumbrance is limited to the assets, income, and revenue of the Board. The Board shall keep minutes of all its proceedings and shall keep an accurate record of receipts and disbursements which shall be audited at the close of each fiscal year by a certified public accountant, and the audit report shall be filed with the State of North Carolina in accordance with Chapter 93B of the General Statutes.

87-43. ELECTRICAL CONTRACTING DEFINED; LICENSES.
Electrical contracting shall be defined as engaging or offering to engage in the business of installing, maintaining, altering or repairing any electric work, wiring, devices, appliances or equipment. No person, partnership, firm or corporation shall engage, or offer to engage, in the business of electrical contracting within the State of North Carolina without having received a license in the applicable classification described in G.S. 87-43.3 from the State Board of Examiners of Electrical Contractors in compliance with the provisions of this Article, regardless of whether the offer was made or the work was performed by a qualified individual as defined in G.S. 87-41.1. In each separate place of business operated by an electrical contractor at least one listed qualified individual shall be regularly on active duty and shall have the specific duty and authority to supervise and direct all electrical wiring or electrical installation work done or made by such separate place of business. Every person, partnership, firm or corporation engaging in the business of electrical contracting shall display a current certificate of license in his principal place of business and in each branch place of business which he operates. Licenses issued hereunder shall be signed by the chairman and the secretary-treasurer of the Board, under the seal of the Board. A registry of all licenses issued to electrical contractors shall be kept by the secretary-treasurer of the Board, and said registry shall be open for public inspection during ordinary business hours.

87-43.1. EXCEPTIONS.
The provisions of this Article shall not apply:

1) To the installation, construction or maintenance of facilities for providing electric service to the public ahead of the point of delivery of electric service to the customer;
2) To the installation, construction, maintenance, or repair of telephone, telegraph, or signal systems, by public utilities, or their corporate affiliates, when said work pertains to the services furnished by said public utilities;
3) To any person in the course of his work as a bona fide employee of a licensee of this Board;
4) To the installation, construction or maintenance of electrical equipment and wiring for temporary use by contractors in connection with the work of construction;
5) To the installation, construction, maintenance or repair of electrical wiring, devices, appliances or equipment by persons, firms or corporations, upon their own property when such property is not intended at the time for rent, lease, sale or gift, who regularly employ one or more electricians or mechanics for the purpose of installing, maintaining, altering or repairing of electrical wiring, devices or equipment used for the conducting of the business of said persons, firms or corporations;

(5a) To any person who is himself and for himself installing, maintaining, altering or repairing electric work, wiring, devices, appliances or equipment upon his own property when such property is not intended at the time for rent, lease, or sale;

6) To the installation, construction, maintenance or repair of electrical wiring, devices, appliances or equipment by State institutions and private educational institutions which maintain a private electrical department;
7) To the replacement of lamps and fuses and to the installation and servicing of cord-connected appliances and equipment connected by means of attachment plug-in devices to suitable receptacles which have been permanently installed or to the servicing of

appliances connected to a permanently installed junction box. This exception does not apply to permanently installed receptacles or to the installation of the junction box.

8) To the bonding of corrugated stainless steel tubing (CSST) gas piping systems as required under Section 310.1.1 of the 2012 N.C. Fuel Gas Code.
9) To the installation, maintenance, or replacement of any load control device or equipment by an electric power supplier, as defined in G.S. 62-133.8, or an electrical contractor contracted by the electric power supplier, so long as the work is subject to supervision by an electrical contractor licensed under this Article. The electric power supplier shall provide such installation, maintenance, or replacement in accordance with (i) an activity or program ordered, authorized, or approved by the North Carolina Utilities Commission pursuant to G.S. 62-133.8 or G.S. 62-133.9 or (ii) a similar program undertaken by a municipal electric service provider, whether the installation, modification, or replacement is made before or after the point of delivery of electric service to the customer. The exemption under this subdivision applies to all existing installations.
10) To the installation, construction, maintenance, or repair of electrical wiring, devices, appliances, or equipment by a person certified as a well contractor under Article 7A of this Chapter when running electrical wires from the well pump to the pressure switch.*
(1937, c.87, s.5; 1951, c.650, ss.1-21/2; 1953, c. 595; 1961, c.1165; 1969, c. 669, s.1; 1979, c. 904, ss. 4-7; 2013-36, s.1; 2013-58, s.1.)

87-43.2. ISSUANCE OF LICENSE.

(a) A person, partnership, firm, or corporation shall be eligible to be licensed as an electrical contractor and to have such license renewed, subject to the provisions of this Article, provided:

1) At least one listed qualified individual shall be regularly employed by the applicant at each separate place of business to have the specific duty and authority to supervise and direct electrical contracting done by or in the name of the licensee;
2) An application is filed with the Board which contains a statement of ownership, states the names and official positions of all employees who are listed qualified individuals and provides such other information as the Board may reasonably require;
3) The applicant, through an authorized officer or owner, shall agree in writing to report to the Board within five days any additions to or loss of the employment of listed qualified individuals; and
4) The applicant furnishes, upon the initial application for a license, a bonding ability statement completed by a bonding company licensed to do business in North Carolina, verifying the applicant's ability to furnish performance bonds for electrical contracting projects having a value in excess of the project value limit for a limited license established pursuant to G.S. 87-43.3 for the intermediate license classification and in excess of the project value limit for a limited license established pursuant to G.S. 87-43.3 for the unlimited license classification. In lieu of furnishing the bonding ability statement, the applicant may submit for evaluation and specific approval of the Board other information certifying the adequacy of the applicant's financial ability to engage in projects of the license classification applied for. The bonding ability statement or other financial information must be submitted in the same name as the license to be issued. If the firm for which a license application is filed is owned by a sole proprietor, the bonding ability statement or other financial information may be furnished in either the firm name or the name of the proprietor. However, if the application is submitted in the name of a sole proprietor, the applicant shall submit information verifying that the person in whose name the application is made is in fact the sole proprietor of the firm.

(b) A license shall indicate the names and classifications of all listed qualified individuals employed by the applicant. A license shall be cancelled if at any time no listed qualified individual is regularly employed by the applicant; provided, that work begun prior to such cancellation may be completed under such conditions as the Board shall direct; and provided further that no work for which a license is required under this Article may be bid for, contracted for or initiated subsequent to such cancellation until said license is reinstated by the Board.

87-43.3. CLASSIFICATION OF LICENSES.

An electrical contracting license shall be issued in one of the following classifications: Limited, under which a licensee shall be pemitted to engage in a single electrical contracting project of a value, as established by the Board, not in excess of fifty thousand dollars ($50,000) and on which the equipment or installation in the contract is rated at not more than 600 volts; Intermediate, under which a licensee shall be permitted to engage in a single electrical contracting project of a value, as established by the Board, not in excess of one hundred thirty thousand dollars ($130,000); Unlimited, under which a licensee shall be permitted to engage in any electrical contracting project regardless of value; and such other special Restricted classifications as the Board may establish from time to time to provide, (i) for the licensing of persons, partnerships, firms or corporations wishing to engage in special restricted electrical contracting, under which license a licensee shall be permitted to engage only in a specific phase of electrical contracting of a special, limited nature, and (ii) for the licensing of persons, partnerships, firms or corporations wishing to engage in electrical contracting work as an incidental part of their primary business, which is a lawful business other than electrical contracting, under which license a licensee shall be permitted to engage only in a specific phase of electrical contracting of a special, limited nature directly in connection with said primary business. The Board may establish appropriate standards for each classification, such standards not to be inconsistent with the provisions of G.S. 87-42. The Board may, be rule, modify the project value limitations up to the maximum amounts set forth in this section for limited and intermediate licenses no more than once every three years based upon an increase or decrease in the project cost index for electrical projects in this state.

87-43.4. RESIDENTIAL DWELLING LICENSE.

There is hereby created a separate license for electrical contractors which shall permit an electrical contractor to engage in electrical contracting projects pertaining to single-family detached residential dwellings. The value of a single project pertaining to a single-family detached residential dwelling shall not be in excess of the maximum value, established in G.S. 87-43.3, of a single project engaged in by a licensee with a license classified as limited. The Board shall establish appropriate standards for this new license. The standards of knowledge, experience and proficiency shall be those appropriate for that license.

87-44. FEES ; LICENSE TERM.
The Board shall collect a fee from each applicant before granting or renewing a license under the provisions of this Article; the annual license fee for the limited classification shall not exceed one hundred dollars ($100.00) for each principal and each branch place of business; the annual license fee for the intermediate classification shall not exceed one hundred fifty dollars ($150.00) for each principal and each branch place of business; the annual license fee for the unlimited classification shall not exceed two hundred dollars ($200.00) for each principal and each branch place of business; and the annual license fee for the special restricted classifications and for the single-family detached residential dwelling license shall not exceed one hundred dollars ($100.00) for each principal and each branch place of business. The Board shall establish a system for the renewal of licenses with varying expiration dates. However, all licenses issued by the Board shall expire one year after the date of issuance. Licenses shall be renewed by the Board, subject to G.S. 87-44.1 and G.S. 87-47, after receipt and evaluation of a renewal application from a licensee and the payment of the required fee. The application shall be upon a form provided by the Board and shall require such information as the Board may prescribe. Renewal applications and fees shall be due 30 days prior to the license expiration date. Upon failure to renew by the expiration date established by the Board, the license shall be automatically revoked. This license may be reinstated by the Board, subject to G.S. 87-44.1 and G.S. 87-47, upon payment of the license fee, an administrative fee of twenty-five dollars ($25.00), and all fees for the lapsed period during which the person, partnership, firm or corporation engaged in electrical contracting, and, further, upon the satisfaction of such experience requirements during the lapse as the Board may prescribe by rule. The Board may collect fees from applicants for examinations in an amount not to exceed one hundred twenty-five dollars ($125.00), except the fee for a specially arranged examination shall not exceed two hundred dollars ($200.00). In addition, the Board may collect an examination review fee, not to exceed twenty-five dollars ($25.00), from failed examinees who apply for a supervised review of their failed examinations.

87-44.1. CONTINUING EDUCATION COURSES REQUIRED.
Beginning July 1, 1991, the Board may require as prerequisite to the annual renewal of a license that every listed qualified individual complete continuing education courses in subjects relating to electrical contracting to assure the safe and proper installation of electrical work and equipment in order to protect the life, health, and property of the public. The listed qualified individual shall complete, during the 12 months immediately preceding license renewal, a specific number of hours of continuing education courses approved by the Board prior to enrollment. The Board shall not require more than 10 hours of continuing education courses per 12 months and such continuing education courses shall include those taught at a community college as approved by the Board. The listed qualified individual may accumulate and carry forward not more than two additional years of the annual continuing education requirement. Attendance at any course or courses of continuing education shall be certified to the Board on a form provided by the Board and shall be submitted at the time the licensee makes application to the Board for its license renewal and payment of its license renewal fee. This continuing education requirement may be waived by the Board in cases of certified illness or undue hardship as provided for in the Rules of the Board.

87-44.2. LICENSING OF NONRESIDENTS.
(a) Definitions. - - The following definitions apply in this section:
1) Delinquent income tax debt. - - The amount of income tax due as stated in a final notice of assessment issued to a taxpayer by the Secretary of Revenue when the taxpayer no longer has the right to contest the amount.
2) Foreign corporation. - - Defined in G.S. 55-1-40.
3) Foreign entity. - - A foreign corporation, a foreign limited liability company, or a foreign partnership.
4) Foreign limited liability company. - - Defined in G.S. 57D-1-03.
5) Foreign partnership. - - Either of the following that does not have a permanent place of business in this State:
   a. A foreign limited partnership as defined in G.S. 59-102.
   b. A general partnership formed under the laws of a jurisdiction other than this State.

(b) Licensing. - - The Board shall not issue a license for a foreign corporation unless the corporation has obtained a certificate of authority from the Secretary of Revenue pursuant to Article 15 of Chapter 55 of the General Statutes. The Board shall not issue a license for a foreign limited liability company unless the company has obtained a certificate of authority from the Secretary of State pursuant to Article 7 of Chapter 57D of the General Statutes.
(c) Information. - - Upon request, the Board shall provide the Secretary of Revenue on an annual basis the name, address, and tax identification number of every nonresident individual and every foreign entity licensed by the Board. The information shall be provided in the format required by the Secretary of Revenue.
(d) Delinquents. - - If the Secretary of Revenue determines that any nonresident individual or foreign corporation licensed by the Board, a member of any foreign limited liability company licensed by the Board, or a partner in any foreign limited liability company licensed by the Board, or a partner in any foreign partnership licensed by the Board, owes a delinquent income tax debt, the Secretary of Revenue may notify the Board of these nonresident individuals and foreign entities and instruct the Board not to renew their licenses. The Board shall not renew the license of such a nonresidential individual or foreign entity identified by the Secretary of Revenue unless the Board receives a written statement from the Secretary that the debt either has been paid or is being paid pursuant to an installment agreement.

87-45. FUNDS.
The fees collected for examinations and licenses under this Article shall be used for the expenses of the State Board of Examiners of Electrical Contractors in carrying out the provisions of this Article. No expenses of the Board or compensation of any member or employee of the Board shall be payable out of the treasury of the State of North Carolina; and neither the Board nor any member or employee thereof shall have any power or authority to make or incur any expense, debt or other financial obligation binding upon the State of North Carolina. Any funds remaining in the hands of the secretary-treasurer to the credit of the Board after all expenses of the Board for the current fiscal year have been fully provided for shall be paid over to the North Carolina Engineering Foundation, Inc., for the benefit of the electrical engineering department of the Greater University of North Carolina. Provided, however, the Board shall have the right to maintain an amount, the cumulative total of which shall not exceed twenty percent (20%) of gross receipts for the previous fiscal year of its operation as a maximum contingency or emergency fund.

87-46. RESPONSIBILITY OF LICENSEE; NONLIABILITY OF BOARD.
Nothing in this Article shall relieve the holder or holders of licenses issued under the provisions hereof from complying with the building or electrical codes or statutes or ordinances of the State of North Carolina, or of any county or municipality thereof now in force or hereafter enacted. Nothing in this Article shall be construed as relieving the holder of any license issued hereunder from responsibility or liability for negligent acts on the part of such holder in connection with electrical contracting work; nor shall the State Board of Examiners of Electrical Contractors be accountable in damages, or otherwise, for the negligent act or acts of any holder of such license.

87-47. PENALTIES IMPOSED BY BOARD; ENFORCEMENT PROCEDURES.
(a1) The following activities are prohibited:
1) Offering to engage or engaging in electrical contracting without being licensed.
2) Selling, transferring, or assigning a license, regardless of whether for a fee.
3) Aiding or abetting an unlicensed person, partnership, firm, or corporation to offer to engage or to engage in electrical contracting.
4) Being convicted of a crime involving fraud or moral turpitude.
5) Engaging in fraud or misrepresentation to obtain a certification, obtain or renew a license, or practice electrical contracting.
6) Engaging in false or misleading advertising.
7) Engaging in malpractice, unethical conduct, fraud, deceit, gross negligence, gross incompetence, or gross misconduct in the practice of electrical contracting.

(a2) The Board may administer one or more of the following penalties if the applicant, licensee, or qualified individual has engaged in any activity prohibited under subsection (a1) of this section:
1) Reprimand.
2) Suspension from practice for a period not to exceed 12 months.
3) Revocation of the right to serve as a listed qualified individual on any license issued by the Board.
4) Revocation of license.
5) Probationary revocation of license or the right to serve as a listed qualified individual on any license issued by the Board, upon conditions set by the Board as the case warrants, and revocation upon failure to comply with the conditions.
6) Revocation of certification.
7) Refusal to certify an applicant or a qualified individual.
8) Refusal to issue a license to an applicant.
9) Refusal to renew a license.

(a3) In addition to administering a penalty under subsection (a2) of this section, the Board may assess a civil penalty of not more than one thousand dollars ($1,000) against a licensee or a qualified individual who has engaged in an activity prohibited under subsection (a1) of this section or has violated another provision of this Article or a rule adopted by the Board. Civil penalties collected under this subsection shall be deposited in the General Fund of North Carolina as nontax revenue. In determining the amount of a civil penalty, the Board shall consider:
1) The degree and extent of harm to the public safety or to property, or the potential for harm.
2) The duration and gravity of the violation.
3) Whether the violation was committed willfully or intentionally, or reflects a continuing pattern.
4) Whether the violation involved elements of fraud or deception either to the public or to the Board, or both.
5) The violator's prior disciplinary record with the Board.
6) Whether and the extent to which the violator profited by the violation.

(a4) Any person, including the Board and its staff on their own initiative, may prefer charges pursuant to this section, and such charges must be submitted in writing to the Board. The Board may, without a hearing, dismiss charges as unfounded or trivial. The Board may issue a notice of violation based on the charges, to be served by a member of the Board's staff or in accordance with Rule 4 of the Rules of Civil Procedure, against any person, partnership, firm, or corporation for engaging in an activity prohibited under subsection (a1) of this section or for a violation of the provisions of this Article or any rule adopted by the Board. The person or other entity to whom the notice of violation is issued may request a hearing by notifying the Board in writing within 20 days after being served with the notice of violation. Hearings shall be conducted by the Board or an administrative law judge pursuant to Article 3A of Chapter 150B of the General Statutes. In conducting hearings, the Board may remove the hearings to any county in which the offense, or any part thereof, was committed if in the opinion of the Board the ends of justice or the convenience of witnesses require such removal.
(a5) If the person or other entity does not request a hearing under subsection (a4) of this section, the Board shall enter a final decision and may impose penalties against the person or other entity. If the person or other entity is not a licensee or a qualified individual, the Board may impose penalties under subsection (a2) of this section. If the person or other entity is a licensee or a qualified individual, the Board may impose penalties under subsection (a2) of this section, subsection (a3) of this section, or both.
(b) The Board shall adopt and publish rules, in accordance with Chapter 150B of the General Statutes and consistent with the provisions of this Article, governing the matters contained in this section.
(c) The Board shall establish and maintain a system whereby detailed records are kept regarding charges and notices of violation pursuant to this section. This record shall include, for each person, partnership, firm, and corporation charged or notified of a violation, the date and nature of each charge or notice of violation, investigatory action taken by the Board, any findings by the Board, and the disposition of the matter.
(d) The Board may reinstate a qualified individual's certification and may reinstate a license after having revoked it, provided that one year has elapsed from revocation until reinstatement and that the vote of the Board for reinstatement is by a majority of its members. The Board shall immediately notify the Secretary of State and the electrical inspectors within the licensee's county of residence upon the revocation of a license or the reissuance of a license which had been revoked.
(e) In any case in which the Board is entitled to convene a hearing to consider imposing any penalty provided for in subsection (a2) or (a3) of this section, the Board may accept an offer in compromise of the charge, whereby the accused shall pay to the Board a penalty of not more than one thousand dollars ($1,000). Penalties collected by the Board under this subsection shall be deposited in the General Fund of North Carolina as nontax revenue.

87-48. PENALTY FOR VIOLATION OF ARTICLE; POWERS OF BOARD TO ENJOIN VIOLATION.

(a) Any person, partnership, firm or corporation who shall violate any of the provisions of this Article or any rule of the Board adopted pursuant to this Article or who shall engage or offer to engage in the business of installing, maintaining, altering or repairing within the State of North Carolina any electric wiring, devices, appliances or equipment without first having obtained a license under the provisions of this Article shall be guilty of a Class 2 misdemeanor.
(b) Whenever it shall appear to the State Board of Examiners of Electrical Contractors that any person, partnership, firm or corporation has violated, is violating, or threatens to violate any provisions of this Article, the Board may apply to the courts of the State for a restraining order and injunction to restrain such practices. If upon such application the court finds that any provision of this Article is being violated, or a violation thereof is threatened, the court shall issue an order restraining and enjoining such violations, and such relief may be granted regardless of whether criminal prosecution is instituted under the provisions of this Article. The venue for actions brought under this subsection shall be the superior court of any county in which such acts are alleged to have been committed or in the county where the defendants in such action reside.

87-49. NO EXAMINATION REQUIRED OF LICENSED CONTRACTORS.
Any person, firm or corporation licensed in this State as a Class II electrical contractor on the effective date of this Article shall be entitled to be licensed, without examination, in the limited classification upon payment of the required fee and may be licensed in the intermediate or in the unlimited classification without written examination upon satisfactory proof to the Board that such applicant is in fact qualified for such classification. Any person, firm or corporation licensed in this State as a Class I electrical contractor on the effective date of this Article shall be entitled to be licensed without examination in the limited, intermediate or unlimited classification upon payment of the required fee. Provided, that any person who has been once duly licensed by the Board, whose license has expired solely because of failure to apply for renewal, may apply and have a license issued under the provisions of this section if within a period of 12 months preceding such issuance the applicant shall have been primarily actively engaged as an electrical contractor or in an occupation which in the judgment of the Board is similar or equivalent to that of an electrical contractor.

87-50. RECIPROCITY.
To the extent that other states which provide for the licensing of electrical contractors provide for similar action, the Board may grant licenses of the same or equivalent classification to electrical contractors licensed by other states without written examination upon satisfactory proof furnished to the Board that the qualifications of such applicants are equal to the qualifications of holders of similar licenses in North Carolina and upon payment of the required fee.

87-50.1. PUBLIC AWARENESS PROGRAM.
The Board shall establish and implement a public awareness program to inform the general public of the purpose and function of the Board.

87-51. SEVERABILITY OF PROVISIONS.
If any provision of this Article or the application thereof to any person or circumstances is for any reason held invalid, such invalidity shall not affect other provisions or applications of the Article which can be given effect without the invalid provision or application, and to this end the provisions of this Article are declared to be severable.

TITLE 21 NCAC18B – BOARD'S RULES FOR THE IMPLEMENTATION OF THE ELECTRICAL CONTRACTING LICENSING ACTS

SECTION .0100 - GENERAL PROVISIONS

.0101 PRINCIPAL OFFICE: MAILING ADDRESS: OFFICE HOURS

The State Board of Examiners of Electrical Contractors has designated 3101 Industrial Drive, Suite 206, Raleigh, North Carolina 27609, as its principal office and mailing address. Its regular office business hours are posted on the Boards website, www.ncbeec.org.

History Note: Authority G.S. 87-39; 87-42;
Eff. October 1, 1988;
Amended Eff. January 1, 2006.
Amended Eff. July 1, 2016

.0102 REFERENCE TO STATE BUILDING AND ELEVATOR CODES

(a) Pursuant to G.S. 150B-14(c), the North Carolina State Building Code, Volume IV Electrical, and the National Electrical Code, NFPA 70, are incorporated by reference. Whenever a reference is made in this Subchapter to one of these codes, it means the current edition and any amendments thereto. The term "National Electrical Code" when used in these rules includes both codes incorporated in this paragraph.

(b) Pursuant to G.S. 150B-21.6, the North Carolina codes and standards for elevators, dumbwaiters, escalators, moving walks and personnel hoists, administered by the North Carolina Department of Labor and codified as 13 NCAC 15 .0200, are incorporated by reference. Whenever a reference is made in this Subchapter to these codes and standards, it means the current edition and amendments thereto.

History Note: Authority G.S. 87-39; 87-42; 95-11(e); 143-138;
Eff. October 1, 1988.
Amended Eff. July 1, 2011.

.0103 Annual Reports

Annual Reports. The Board shall make timely filing of all reports required by G.S. 93B-2. In case of the untimely filing of a report, then pursuant to G.S. 93B-2(d), the Board shall hold in escrow any fees tendered between the filing deadline and the filing date. Issuance of licenses, renewals and application processing shall continue during any interval created by the untimely filing of a report required by G.S.93B-2.

History Note: Authority G.S. 87-39; 87-40; 87-42; 93B-2;
Eff. October 1, 1988;
Amended Eff. July 1, 2011; February 1, 1996; February 1, 1990.

.0104 AUTHORIZED LEGAL ACTION BY STAFF

(a) The following members of the Board's staff are authorized to act on behalf of the Board in criminal and civil actions brought under the provisions of G.S. 87-48:

1) the Board's executive director; and
2) the Board's field representatives/investigators.

(b) The staff members set out in paragraph (a) of this rule are authorized to sign affidavits as to the content of Board records, execute or verify civil complaints in the name of the Board, sign criminal warrants with respect to violations of G.S.87-48, testify in court or in other proceedings and to preform all other acts as may be required in criminal and civil actions related to G.S. 87-48.

History Note: Authority G.S. 87-40; 87-42; 87-43;
Eff. October 1, 1988;
Amended Eff. February 1, 2006; April 1, 1993.

.0105 BOARD RECORDS

The records of the Board shall be maintained at the Board office and shall be available for public inspection, in accordance with G.S. 132, during regular office business hours.

History Note: Authority G.S. 87-42; 87-47; 132-1;
Eff. October 1, 1988;
Amended Eff. February 1, 1995.

.0106 JOINT RESOLUTION AND AGREEMENTS (Repealed)

History Note: Authority G.S. 87-39; 87-42;
Eff. October 1, 1988. Repealed Eff. July 1, 2011

.0107 PROCESSING FEE FOR SUBMITTAL OF BAD CHECK

(a) Any person, firm or corporation submitting to the Board a check which is subsequently returned to the Board because of insufficient funds in or no account at a bank shall be charged the maximum processing fee allowed by G.S. 25-3-506 for processing such check.

(b) Until such time as the payor of such bad check has made the check good and paid the prescribed processing fee, the payor shall not be eligible to take an examination, review an examination, obtain a license or have a license renewed.

(c) Any license which has been issued based on the payment of a check which is subsequently returned to the Board for reasons stated herein shall be declared invalid until such time as the payor has made the check good and paid the prescribed processing fee.

(d) Payment to the Board for making good such bad check and for the prescribed processing fee may be made in the form of cash, cashier's check or money order.

(e) All examination, examination review, license and license renewal applications provided by the Board shall contain information in a conspicuous place thereon clearly advising the applicant of the foregoing bad check processing fee.

History Note: Authority G.S. 25-3-506; 87-42;
Eff. October 1, 1988;

Amended Eff. May 1, 1998.

.0108 PETITION FOR RULE-MAKING PROCEDURES

(a) Any person wishing to request the Board to adopt, amend, or repeal a rule shall file a petition with the Board pursuant to G.S. 150B-20, by mail or personal delivery. The petition shall be signed by the petitioner and shall include the petitioner's address.
(b) There is no form required for the petition.
(c) The Board shall grant the petition if it finds the requested rule change would comply with the requirements of law and, if so, it would likely serve the public interest. The Board may request additional information from the petitioner and may contact interested persons or persons likely to be affected by the proposal and request their comments in order to obtain information upon which to base the determination of public interest. Before granting or denying the petition, the Board shall consider the contents of the petition and any other information filed with or obtained by the Board.

History Note: Authority G.S. 87-42; 150B-20;
Eff. October 1, 1988;
Amended Eff. March 1, 1999.

.0109 DECLARATORY RULING PROCEDURES

(a) All requests for declaratory rulings shall be written and mailed to the Board at the Board's address.
(b) Each request for a declaratory ruling must include the following information:
1) the name and address of the person requesting the ruling;
2) the statute or rule to which the request relates;
3) a concise statement of the manner in which the requesting person is aggrieved by the rule or statute or its potential application to him; and
4) a statement whether an oral hearing is desired and, if so, the reason therefor.

(c) Upon receipt of a request for a declaratory ruling, the Board shall determine whether a ruling is appropriate under the facts stated.
(d) The Board shall proceed to issue a declaratory ruling when the person requesting the ruling shows that, with regard to the facts presented:
1) the rule or statute in question is unclear on its face;
2) circumstances are so changed since the adoption of a rule that a declaratory ruling is warranted;
3) the factors specified in the request were not given appropriate consideration by the Board at the time the rule was adopted;
4) the rule or statute is unclear in its application to the requesting person's facts; or
5) a fair question exists regarding the validity of the rule because of:
(A) an absence of authority for the Board's adoption of the rule; or
(B) irregularities in the Board's rule-making proceedings.

(e) When the Board determines for good cause that the issuance of a declaratory ruling is undesirable, the Board shall notify, in writing, the person requesting the ruling, stating the reasons for the denial of the request. The Board will ordinarily decline to issue a declaratory ruling when:
1) there has been a similar controlling factual determination made by the Board;
2) the rule-making record shows that the factual issues raised by the request were specifically considered prior to adoption of the rule; or
3) the subject matter of the request is involved in pending litigation in any state or federal court in North Carolina.

(f) Prior to issuing a declaratory ruling, the Board may give notice of the declaratory proceedings to any persons it deems appropriate and may direct that fact-finding proceedings appropriate to the circumstances of the particular request be conducted by the Board. The proceedings may consist of written submissions, an oral hearing, or other appropriate procedures.
(g) If the Board finds evidence that the factors listed in Subdivisions (d)(1), (2), or (3) of this Rule exist or potentially exist beyond the specific facts presented in a particular petition for declaratory ruling, the Board shall consider rule-making proceedings on the rule.
(h) A record of each declaratory ruling and the procedures conducted therefore will be maintained by the Board at least until:
1) the statute or rule interpreted by the declaratory ruling is amended, altered, or repealed;
2) the Board prospectively changes the declaratory ruling for good reason;
3) any court sets aside the ruling in litigation between the Board and the party requesting the ruling; or
4) any court of the Appellate Division of the General Court of Justice construes the statute or rule which is the subject of the declaratory ruling in a manner plainly irreconcilable with the declaratory ruling.

(i) The record will contain:
1) the request for a declaratory ruling;
2) all written submissions filed in the request, whether filed by the person requesting the ruling or by any other person;
3) a record or summary of oral presentations, if any; and
4) a copy of the declaratory ruling.

History Note: Authority G.S. 87-42; 150B-4;
Eff. October 1, 1988.

.0110 PRODUCTION OF PUBLIC RECORDS

a) Records of current license status are available without charge on the Board website, www.ncbeec.org.
b) Production of license history or verification of license of licensees or qualified individuals is available at a cost of $25.00 for each report.

History Note: Authority G.S. 87-42, G.S. 87-44, G.S. 93B-3, G.S. 150B-19.
Eff. October 1, 2017

SECTION .0200 - EXAMINATIONS

.0201 REQUIREMENTS FOR ALL EXAMINATION APPLICANTS

(a) To take an examination in any electrical contracting license classification, the applicant must:

1) be at least 18 years of age;
2) submit the required duly filed application as defined in Rule .0210;
3) submit with the application written statements from at least two persons attesting to the applicant's good character; and
4) meet any other requirements set out in Paragraph (b) of this Rule.

(b) Examination applicants must meet the following requirements for the specified license classifications:

1) Limited classification. An applicant must have at least two years of experience, as defined in Rule .0202 of this Section, of which at least one year shall be primary experience. The balance of experience may be primary, secondary or both.
2) Intermediate classification. An applicant must have at least four years of experience, as defined in Rule .0202 of this Section, of which at least two and one half years shall be primary experience. The balance of experience may be primary, secondary or both.
3) Unlimited classification. An applicant must:
   A) have at least five years of experience, as defined in Rule .0202 of this Section, of which at least four years shall be primary experience. The balance of experience may be primary, secondary or both, and
   B) submit with the application written statements from at least two persons, who are knowledgeable of the applicant's electrical experience, attesting to the applicant's ability to supervise and direct all electrical wiring or electrical installation work done by an electrical contracting business in the unlimited classification.
4) Single family detached residential dwelling (SP-SFD) classification. An applicant must have at least two years of experience, as defined in Rule .0202 of this Section, of which at least one year shall be primary experience. The balance of experience may be primary, secondary or both.
5) Special restricted fire alarm/low voltage (FALV) classification. An applicant must have at least two years of experience, as defined in Rule .0202 of this Section, of which at least one year shall be primary experience. The balance of experience may be primary, secondary or both. An applicant in this classification may also receive creditable experience for service in any of the capacities listed in Rule .0202 that the applicant gained in the low voltage field.
6) Special restricted elevator (SP-EL) classification. An applicant must:
   A) have at least four years of experience, as defined in Rule .0202 of this Section, of which at least two and one-half years shall be primary experience. The balance of experience may be primary, secondary or both. An applicant in this classification may also receive creditable experience for service in any of the capacities listed in Rule .0202 that the applicant gained in the elevator field, and
   B) include on the application information verifying that the applicant is primarily engaged in, or is regularly employed by and will be the listed qualified individual for a firm that is primarily engaged in, a lawful elevator business in this State.
7) Special restricted plumbing and heating (SP-PH) classification. An applicant must:
   A) have at least two years of experience, as defined in Rule .0202 of this Section, of which at least one year shall be primary experience. The balance of experience may be primary, secondary or both. An applicant in this classification may also receive creditable experience for service in any of the capacities listed in Rule .0202 that the applicant gained in the plumbing, heating or air conditioning field, and
   B) include on the application information verifying that the applicant is primarily engaged in, or is regularly employed by and will be the listed qualified individual for a firm that is primarily engaged in, a lawful plumbing, heating or air conditioning business in this State.
8) Special restricted ground water pump (SP-WP) classification. An applicant must:
   A) have at least two years of experience, as defined in Rule .0202 of this Section, of which at least one year shall be primary experience. The balance of experience may be primary, secondary or both. An applicant in this classification may also receive creditable experience for service in any of the capacities listed in Rule .0202 that the applicant gained in the ground water pump field, and
   B) include on the application information verifying that the applicant is primarily engaged in, or is regularly employed by and will be the listed qualified individual for a firm that is primarily engaged in, a lawful ground water pump business in this State.
9) Special restricted electric sign (SP-ES) classification. An applicant must:
   A) have at least two years of experience, as defined in Rule .0202 of this Section, of which at least one year shall be primary experience. The balance of experience may be primary, secondary or both. An applicant in this classification may also receive creditable experience in any of the capacities listed in Rule .0202 that the applicant gained in the electric sign field, and
   B) include on the application information verifying that the applicant is primarily engaged in, or is regularly employed by and will be the listed qualified individual for a firm that is primarily engaged in, a lawful electric sign business in this State.
10) Special restricted swimming pool (SP-SP) classification. An applicant must:
   A) have at least two years of experience, as defined in Rule .0202 of this Section, of which at least one year shall be primary experience. The balance of experience may be primary, secondary or both. An applicant in this classification may also receive creditable experience for service in any of the capacities listed in Rule .0202 that the applicant gained in the swimming pool field, and
   B) include on the application information verifying that the applicant is primarily engaged in, or is regularly employed by and will be the listed qualified individual for a firm that is primarily engaged in, a lawful swimming pool business in this State.

History Note: *Authority G.S. 87-42; 87-43.3; 87-43.4; 87-44;*
Eff. October 1, 1988;
Amended Eff. October 1, 2017; January 1, 2010; March 1, 1999; February 1, 1990.

.0202 EXPERIENCE

(a) Primary. As used in this Chapter, primary experience means working experience gained by the applicant while engaged directly in the installation of electrical wiring and equipment governed by the National Electrical Code or work activities directly related thereto. Examples of the capacity in which a person may work in gaining primary experience and the percentages for creditable primary experience are as follows:

		Percentage
1)	journeyman electrician or electrician mechanic, both meaning the same;	100
2)	electrical foreman;	100
3)	electrical general foreman;	100
4)	electrical superintendent;	100
5)	electrical general superintendent;	100
6)	estimator for licensed electrical contractor;	100
7)	electrical inspector recognized as such by the State Department of Insurance;	100
8)	time spent by a professional engineer who is responsible for follow-up project supervision, beyond the point of delivery, in electrical engineering, design consulting;	100
9)	full-time instructor teaching National Electrical Code, NFPA 72 and related electrical courses at a college, university, community college, technical institute, high school or vocational school;	80
10)	maintenance journeyman electrician or electrician mechanic employed in a full-time electrical maintenance department;	100
11)	time actually spent in electrical maintenance by a maintenance journeyman electrician or electrician mechanic regularly employed in other than a full-time electrical maintenance department;	100
12)	military person holding an electrician rating or rank of at least E-4 who is engaged in land based	
13)	electrical installations similar or equivalent to work performed by an electrical contractor;	100
14)	time actually spent in part-time or incidental work in any primary experience category;	100
15)	time actually spent installing or maintaining fire alarm/low voltage systems;	100
16)	time as a holder of NICET certification on NFPA 72 Level I, II, III or IV applicable to Fire Alarm-Low Voltage only	100

In calculating accumulative primary experience, a total of 2,000 hours shall equal one creditable year. The total number of creditable years shall be calculated by dividing the total hours of primary experience by 2,000. Example: Applicant has worked in primary capacity for a total of 7,200 hours of primary experience.

$\frac{7,200}{2,000}$ = 3.6 years creditable primary work experience

(b) Secondary. As used in this Chapter, secondary experience means working experience gained while engaged in work or training that is related to the installation of electrical wiring and equipment governed by the National Electrical Code. Examples of the type of work or training in which a person may engage to gain creditable secondary experience and the percentages for creditable secondary experience are as follows:

		Percentage
1)	apprentice electrician training in an apprentice program approved by the NC Department of Labor;	100
2)	time spent as an apprentice electrician or helper other than as described in subparagraphs (1) and (3) of this paragraph;	80
3)	time actually spent in electrical maintenance by a maintenance apprentice or electrician helper regularly employed in other than a full-time electrical maintenance department;	80
4)	student satisfactorily completing National Electrical Code and related electrical courses at a college, university, community college, technical institute, high school or vocational school;	50
5)	Time spent by a professional engineer who is not responsible for follow-up project supervision, beyond the point of delivery, in electrical engineering, design, or consulting;	50
6)	Electrical construction design under the supervision of a professional engineer;	50
7)	sales representative for an electrical wholesaler, distributor, or manufacturer;	20
8)	appliance service and repair;	20
9)	electric utility lineman; and	10
10)	electric utility serviceman	20

In calculating accumulative secondary experience, a total of 2,000 hours shall equal one creditable year. The total number of creditable years shall be calculated by applying the percentage for creditable secondary experience and dividing the remainder hours by 2,000. Example: Applicant has 1,000 hours of work experience as a helper or regular apprentice and 2,200 hours of experience while enrolled in an approved apprentice training program: 1,000 hours at 80 percent = 800 hours secondary experience; 2,200 hours at 100 percent = 2,200 hours secondary experience;

$\frac{800 + 2,200}{2,000}$ = 1.5 years creditable secondary experience

(c) Other Experience. The Board shall approve other experience that it finds to be equivalent or similar to the primary or secondary experience defined in this Rule.

History Note: *Authority G.S. 87-42; 87-43.3; 87-43.4;*
Eff. October 1, 1988;
Amended Eff. October 1, 2017; January 1, 2010; March 1, 1999.

.0203 EXAMINATION SCOPE
(a) General. In addition to the examination subjects specified in G.S. 87-42, qualifying examinations for each license classification shall include permit and inspection requirements, business practices and the North Carolina statutes and rules applicable to electrical contracting.
(b) Variation in Scope. The examinations for each license classification shall be based on a level of technical and practical knowledge concerning the safe and proper installation of electrical work and equipment that corresponds to the electrical contracting work authorized under each license classification.
History Note: Authority G.S. 87-42; 87-43.3; 87-43.4;
Eff. October 1, 1988;
Amended Eff. March 1, 1999; April 1, 1993.

.0204 EXAMINATIONS
(a) All qualifying examinations administered by the Board for each license classification shall be written or computer-based examinations and must be taken personally by the approved applicant after the applicant has met the requirement for examination contained in the rules in this Subchapter.
(b) Upon approval of an applicant pursuant to these Rules, the Board shall provide the applicant a notice of examination eligibility that is valid for a period of three months and for a single administration of the qualifying examination. Upon receipt of a notice of examination eligibility from the Board, the applicant shall schedule the examination by contacting the Board or the authorized testing service. The applicant shall be scheduled for the examination, by the Board and the Board or authorized testing service will confirm the date, time and place.
(c) A minimum grade of 70 out of a possible score of 100 is required in order to pass any qualifying examination administered by the Board.
History Note: Authority G.S. 87-42; 87-43.3; 87-43.4; 93B-8;
Eff. October 1, 1988;
Temporary Amended Eff. August 31, 2001;
Amended Eff. October 1, 2017; July 1, 2011; January 1, 2006; July 18, 2002.

.0205 MINIMUM PASSING GRADE (Repealed)

.0206 REGULAR EXAMINATIONS (Repealed)

.0207 APPLICATION FOR REGULAR EXAMINATIONS (Repealed)

.0208 SPECIALLY-ARRANGED EXAMINATIONS (Repealed)
History Note: Authority G.S. 87-42; 87-43.3; 87-43.4; 87-44;
Eff. October 1, 1988;
Amended Eff. August 1, 1999; (Rule .0208);
February 1, 1996 (Rule .0207); April 1, 1993 (Rule .0206)
February 1, 1990; (Rule .0208)
Temporary Amended Eff. August 31, 2001;
Repealed Eff. July 1, 2011.

.0209 FEES
(a) The application and examination fee for regular qualifying examinations shall be ninety dollars ($90.00) for all classifications.
(b) The fee for a review of a failed examination is twenty-five dollars ($25.00). All reviews are supervised by the Board or staff.
(c) The examination fees for examinations in all classifications and the fees for examination reviews shall be in the form of cash, check, money order, Visa, or Mastercard made payable to the Board and shall accompany the respective applications when filed with the Board.
(d) Examination fees received with applications filed for qualifying examinations shall be retained by the Board unless:
1) an application is not filed as prescribed in Rule .0210 of this Section, in which case the examination fee of sixty dollars ($60.00) shall be returned and application shall be returned; or
2) the applicant does not take the examination during the examination period for which application was made, files a written request for a refund setting out extenuating circumstance and the Board finds extenuating circumstances.
(e) Examination review fees are non-refundable unless the applicant does not take the review, files a written request for a refund, setting out extenuating circumstance and the Board finds extenuating circumstances.
(f) Any fee retained by the Board shall not be creditable toward any future examination fee or examination review.
(g) Extenuating circumstances for the purposes of Paragraphs (d)(2) and (e) of this Rule shall be the applicant's illness, bodily injury or death, or death of the applicant's spouse, child, parent, or sibling, or a breakdown of the applicant's transportation to the designated site of the examination or examination review.
History Note: Authority G.S. 87-42; 87-43.3; 87-43.4; 87-44;
Eff. October 1, 1988;
Amended Eff. May 1, 1998; July 1, 1989;
Temporary Amendment Eff. June 30, 2000;
Temporary Amended Eff. August 31, 2001;
Amended Eff. July 1, 2011; January 1, 2008; December 4, 2002.
Pursuant to G.S. 150B-21.3A, rule is necessary without substantive public interest Eff. February 2, 2016.
Amended Eff. July 1, 2016

.0210 APPLICATIONS DULY FILED
Examinations applications shall be considered as duly filed when the applicant has filed an application with the Board, on a form provided by the Board, together with the examination fee as prescribed in Rule .0209 of this Section and information sufficient to meet the minimum examination requirements applicable to the classification involved. By filing an application with the Board, an applicant authorizes the Board or the Board's staff to verify, in any manner the Board or staff deems necessary and appropriate, the information submitted on or in support

of his application. The Board or staff shall determine whether applications are duly filed, process all applications, and return all applications not duly filed.

History Note: *Authority G.S. 87-42; 87-43.3; 87-43.4; 87-44;*
Eff. October 1, 1988;
Temporary Amended Eff. August 31, 2001;
Amended Eff. July 1, 2011; July 18, 2002

.0211 WAITING PERIOD BETWEEN EXAMINATIONS

(a) A person who fails a qualifying examination must wait three months from the date of the failed examination before being eligible to take another examination in the same classification.

(b) A person shall be considered a new applicant each time he or she applies to take an examination, and must file an application on the standard application form and pay the required application fee and examination fee.

History Note: *Authority G.S. 87-42; 87-43.3; 87-43.4;*
Eff. October 1, 1988;
Amended Eff. July 1, 2011; January 1, 2006
Amended Eff. July 1, 2016

SECTION .0300 - DEFINITIONS AND EXPLANATIONS OF TERMS APPLICABLE TO LICENSING

.0301 LISTED QUALIFIED INDIVIDUAL

A listed qualified individual cannot be "regularly on active duty", as the term is used in G.S. 87-43, during the hours when he has committed himself to work for an employer other than the employers on whose license he is the listed qualified individual. Therefore, no electrical contracting work can be done under a license during the hours its listed qualified individual has committed himself to duty as an employee in other employment.

History Note: *Authority G.S. 87-42; 87-43;*
Eff. October 1, 1988;
Amended Eff. February 1, 1990.

.0302 DRAWINGS

Pursuant to an agreement between the Board and the North Carolina State Board for Professional Engineers and Land Surveyors, the following definitions and procedures shall apply to drawings:

1) Design Drawing. A design drawing indicates the total result to be achieved by an assembly of various systems. It is the creative work of a design professional, prepared with the use of special knowledge of the mathematical, physical and engineering sciences in order to accomplish a specific function and bears the seal of the preparing design professional.
2) Shop Drawing. A shop drawing indicates the fabrication, assembly, installation or erection of a system's components. It is usually prepared by the manufacturer or installing contractor for the purpose of conveying to the mechanic the materials and construction sequencing procedures to be used in achieving the total result called for by the design drawings.
3) Drawings by Contractor. If design drawings are not required by any statute, the installing contractor may prepare preliminary drawings to illustrate his proposed installation. If design drawings are required by a statute for an installation, the contractor may prepare preliminary drawings to illustrate his proposed installation; provided his proposal contains specific provisions to assure the awarding authority that, if awarded the project, the services of a duly registered professional will be employed to prepare the required final design drawings for the installation proposed and that the installation will be constructed in accordance with such design drawings.

History Note: *Authority G.S. 87-39; 87-42;*
Eff. October 1, 1988.

.0303 ELECTRICAL INSTALLATION: PROJECT: PROJECT VALUE-LIMITATION

For the purpose of implementing G.S. 87-43.3 pertaining to the limited and intermediate electrical contracting license classifications, the following provisions shall apply:

1) Electrical Installation. Electrical work is construed to be an electrical installation when the work is made or is to be made:
   a) in or on a new building or structure;
   b) in or on an addition to an existing building or structure;
   c) in or on an existing building or structure, including electrical work in connection with lighting or power rewiring or with the addition or replacement of machines, equipment or fixtures; or
   d) in an area outside of buildings or structures, either overhead or underground or both.

2) Project. An electrical installation is construed to be a separate electrical contracting project if all the following conditions are met:
   a) the installation is, or will be, separate and independently supplied by a separate service, feeder or feeder system; and
   b) the installation is for:
      i. an individual building or structure which is separated from other buildings or structures by a lot line or, if located on the same lot with other buildings or structures, is physically separated from such other buildings or structures by an open space or an area separation fire wall;
      ii. an individual townhouse single-family dwelling unit constructed in a series or group of attached units with property lines separating such units;
      iii. an individual tenant space in a mall-type shopping center;
      iv. an addition to an existing building or structure;

v. an existing building or structure, including electrical work in connection with lighting or power rewiring or with the addition or replacement of machines, equipment or fixtures; or
vi. an outdoor area either overhead or underground or both.

c) the negotiations or bidding procedures for the installation are carried out in a manner totally separate and apart from the negotiations or bidding procedures of any other electrical installation or part thereof;
d) except for new additions, alterations, repairs or changes to a pre-existing electrical installation, no electrical interconnection or relationship whatsoever will exist between the installation and any other electrical installation or part thereof;
e) a separate permit is to be obtained for each individual building structure or outdoor area involved from the governmental agency having jurisdiction.

If a question is raised by a party at interest or if requested by the Board or Board's staff for any reason, the owner or the awarding authority or an agent of either furnishes to the Board, and to the inspections department having jurisdiction, a sworn affidavit confirming that each and every one of the conditions set forth in (2)(a) through (e) of this Rule are satisfied.

3) Relationship of Plans and Specifications to Definition of Project. Even though such electrical work may not fully comply with each and every condition set out in Subparagraph (2) of this Rule, the entire electrical work, wiring, devices, appliances or equipment covered by one set of plans or specifications is construed to be a single electrical contracting project.
4) Project Value Limitation. In determining the value of a given electrical contracting project, the total known or reasonable estimated costs of all electrical wiring materials, equipment, fixtures, devices, and installation must be included in arriving at this value, regardless of who furnishes all or part of same, and regardless of the form or type of contract or subcontract involved. if the total cost of the wiring, materials, etc., including that furnished by others, plus the total cost of the installation involved, will be more than fifty thousand dollars ($50,000) but not more than one hundred thirty thousand dollars ($130,000), then only an electrical contractor holding either an intermediate or unlimited license will be eligible to submit a proposal or engage in the project.
   a) if the total cost of the wiring, materials, etc., including that furnished by others, plus the total cost of the installation involved, will be more than fifty thousand dollars ($50,000), then only an electrical contractor holding either an intermediate or unlimited license will be eligible to submit a proposal or engage in the project.
   b) if the total cost of the wiring, materials, etc., including that furnished by others, plus the total cost of the installation involved, will exceed one hundred thirty thousand dollars ($130,000), then only an electrical contractor holding an unlimited license will be eligible to submit a proposal or engage in the project.

   If a given electrical contracting project is subdivided into two or more contracts or subcontracts for any reason, then the total value of the combined contracts or subcontracts which may be awarded to or accepted by any one licensee of the Board must be within the total project value in accordance with this Rule.
   The Board's staff shall make a determination of what constitutes a project in any given situation, and any party at interest shall have the right to appeal any staff determination to the Board for a final binding decision.

History Note: *Authority G.S. 87-42; 87-43;*
Eff. October 1, 1988;
Amended Eff. September 1, 2014; January 1, 2008; February 1, 1996; February 1, 1990.

.0304 POINT OF DELIVERY AND RELATED TERMS

(a) "Point of delivery" and other terms related thereto are defined as follows:
1) Consumer's Premises. A "consumer's premises" is any publicly or privately owned building, structure, land or facility to which electric energy is being furnished.
2) Consumer's Wiring. A "consumer's wiring" is the portion of a wiring system that is located at or on the consumer's premises and for which the consumer has full responsibility for ownership, operation and maintenance. This wiring is considered to be beyond the point of delivery.
3) Electric Power Supplier. An "electric power supplier" is a public utility company, a private utility company, an electric membership co-op, a municipal utility or any other entity that furnishes electric energy for private or public use.
4) Electric Power Supplier's Wiring. An "electric power supplier's wiring" is the portion of a wiring system that is located either off, at, or on the consumer's premises and for which the electric supplier has full responsibility for ownership, operation and maintenance. This wiring is considered to be ahead of the point of delivery.
5) Point of Delivery. The "point of delivery," as used in G.S. 87-43.1(1), is the point where an electric power supplier's wiring terminates in the supplier's delivery of electrical energy to a consumer's wiring at or on the consumer's premises.
6) Service Point. The "service point" in a wiring system, defined in the National Electrical Code as the point of connection between the facilities of the serving utility and the premises wiring, is construed to be the same as the point of delivery.

(b) Special Conditions. Where conditions of service or other circumstances require that a portion of an electric power supplier's owned, operated and maintained equipment, such as metering and load control equipment, be installed within the consumer's wiring, such installation shall be construed to be beyond the point of delivery, and the installation of such equipment is required to be made by a licensee of the Board. This provision does not prohibit an electric power supplier from installing its metering and load control equipment in the enclosures for such equipment or removing same from such enclosures.
(c) Rulings. Where conditions of service or other circumstances are such that the definition of point of delivery and the related terms in this Rule are not strictly applicable, either in whole or in part, a special limited ruling will be issued by the Board on request of any party of interest.
(d) Illustration. The point of delivery and service point in a wiring system and the application of the North Carolina Electrical Contracting Licensing Act are further defined in the following illustration:

POINT OF DELIVERY - G.S. CH 87, ART. 4
SERVICE POINT - NEC, NFPA 70

◄ AHEAD ►	◄ BEYOND ►
Wiring on this side is that portion of a wiring system for which the electric power supplier has the responsibility for ownership, operation and maintenance, including any overhead, underground, inside or outside wiring.	Wiring on this side is that portion of a wiring system for which the consumer has the responsibility for ownership and maintenance, including any overhead, underground, inside or outside wiring.
LICENSE REQUIREMENTS Wiring installations on this side are exempted from the North Carolina Electrical Contracting Licensing Act. Parties of interest are referred to the North Carolina Licensing Board for General Contractors for applicable licensing requirements.	**LICENSE REQUIREMENTS** Wiring installations on this side are covered by the North Carolina Electrical Contracting Licensing Act and, pursuant to the provisions of said act, persons, firms, or corporations installing, maintaining, altering or repairing such wiring are required to hold an appropriate license issued by the State Board of Examiners of Electrical Contractors.

History Note: Authority G.S. 87-39; 87-42; 87-43.1(1);
Eff. October 1, 1988.

.0305 LICENSE REQUIREMENTS AND EXEMPTIONS

(a) Pursuant to G.S. 87-43.1(7), an electrical contractor's license is not required for:

1) the installation and servicing of electrical appliances or equipment which is being supplied through a cord connected by means of an attachment plug-in device to a suitable permanently installed receptacle; and
2) the servicing of electrical appliances or equipment being supplied through wiring connected to a permanently installed junction box.

(b) Unless exempted by a statute other than G.S. 87-43.1(7), an electrical contractor's license is required for:

1) the installation of the permanently installed receptacles to which cord-supplied electrical appliances or equipment are connected;
2) the installation of the permanently installed junction boxes to which electrical appliances or equipment are connected; and
3) any wiring connected to and supplied from the out-put side of any electrical appliances or equipment regardless of whether such appliances or equipment are supplied through a cord connected by means of an attachment plug-in device to a suitable permanently installed receptacle or are supplied through wiring connected to a permanently installed junction box.

History Note: Authority G.S. 87-42; 87-43.1;
Eff. October 1, 1988 Amended Eff. July 1, 2011.

.0306 BONA FIDE EMPLOYEE

(a) For the exemption for electrical work done as a bona fide employee of a licensee under G.S. 87-43.1(3), the following conditions must be met:

1) The restrictions of the employing licensee's license apply to any employee of the license.
2) The employing licensee shall have control and direction of the details, methods and manner of performing the electrical work being done by the employee. The manner of payment, if any, to the person shall not be the sole determining factor concerning whether the person is an employee.
3) The electrical work shall be performed under the supervision and direction of a listed qualified individual who is the employing licensee, or under the supervision and direction of a listed qualified individual regularly employed by the employing licensee.

(b) The employing licensee, the employee, and every listed qualified individual of the licensee shall furnish any information the Board may require, including affidavits, to evaluate and determine a claim of employee exemption.

(c) When the information furnished to the Board does not substantiate compliance with this Rule, the individual shall be deemed to be an independent contractor rather than an employee and shall be subject to G.S. Chapter 87, Article 4.

History Note: Authority G.S. 87-42;
Eff. October 1, 1988;
Amended Eff. April 1, 1993.

.0307 CERTAIN ELECTRICAL WORK/MANUFACTURER/PREFABRICATED UNITS

(a) A manufacturer of prefabricated units is not required to be licensed by the Board to engage in installing, altering or repairing the electric work, wiring, devices, appliances or equipment in or on its prefabricated units under either of the following conditions:

1) during the time the prefabricated units are physically located at the actual place of manufacture; or
2) after the prefabricated units have been removed from the actual place of manufacture if all of the following conditions are met:
   A) the prefabricated units have been factory inspected, approved and duly labeled by an independent certifying agency approved by the North Carolina Building Code Council; and
   B) the work is specifically restricted to that part of the electrical installation covered under the approved independent certifying agency's initial label and such work is performed by the manufacturer's bona fide employees under the onsite direct personal supervision of the independent certifying agency's official inspector and in cooperation with and approval by the local governmental inspection authority.

(b) Except as specified in this Rule, this exemption from the North Carolina Electrical Contracting Licensing Act does not apply once a unit has been removed from the manufacturing facility and placed anywhere within the State of North Carolina, including sales lots, the property of purchasers and lessees, or any other place for any reason, either temporarily or permanently.
(c) In order for a manufacturer to engage or offer to engage in the installation, alteration, maintenance or repair of any electric work, wiring, devices, appliances or equipment in connection with any unit, except as permitted in this Rule, the manufacturer must hold an active electrical contracting license issued by the Board.
(d) Nothing in this Rule shall be construed to exempt any electrical work on any property from the North Carolina State Building Code requirements or from any local special construction rules or permit or inspection requirements.
History Note: *Authority G.S. 87-42; 87-43;*
Eff. October 1, 1988.

SECTION .0400 - LICENSING REQUIREMENTS

.0401 LICENSE APPLICANTS: REQUIREMENTS FOR EACH CLASSIFICATION
(a) An applicant for an electrical contracting license in each of the license classifications shall:
1) submit a completed application to the Board on a form provided by the Board for the license classification involved;
2) submit the annual license fee for the license classification involved as prescribed in Rule .0404 of this Section; and
3) furnish the name, signature and social security number of at least one person to serve as the listed qualified individual for the applicant's license.

(b) Corporation, Partnership or Limited Liability Company. If the license applicant is a corporation, partnership or limited liability company, the application shall contain the names and titles of the officers, names of the partners or names of the members of the limited liability company, whichever is applicable.
(c) Intermediate and Unlimited Classifications. License applicants in the intermediate and unlimited classifications shall also furnish a bonding ability statement or a line of credit letter issued by a bank, savings bank, or savings and loan association pursuant to G.S. 87-43.2(a)(4).
(d) Special Classifications. A license applicant in the SP-EL, SP-PH, SP-WP, SP-ES or SP-SP classification must also include on the license application information verifying that the applicant is conducting a lawful business in the State of North Carolina in the license classification involved.
History Note: *Authority G.S. 87-42; 87-43.2; 87-43.3; 87-43.4;*
Eff. November 1, 1988;
Amended Eff. February 1, 1995; April 1, 1993; February 1, 1990.

.0402 LICENSE NAME REQUIREMENTS
(a) Issuance of License. The name in which a license is issued must be distinguishable upon the records of the Board from the name in which a license has already been issued. If the name requested, after deleting all spaces, punctuation marks, articles, prepositions, conjunctions and, whether abbreviated or not, "corporation," "incorporated," "company," or "limited," is not identical to the name in which a license has already been issued, it shall be distinguishable. The substitution of a numeral for a word that represents the same numeral shall not make the name distinguishable.
(b) Name In Which Business Must Be Conducted. All electrical contracting business, including all business advertising and the submission of all documents and papers, conducted in the state of North Carolina by a licensee of the Board shall be conducted in the exact name in which the electrical contracting license is issued.
(c) Notification of Address, Telephone Change and email address. All licensees shall notify the Board in writing within 30 days of any change in location, mailing address, telephone number or email address.
History Note: *Authority G.S. 87-42;*
Eff. October 1, 1988;
Amended Eff. July 1, 2011; March 1, 1999; February 1, 1996.

.0403 SEPARATE LICENSE REQUIREMENTS
(a) A separate license certificate and license fee shall be required for each separate place of business with at least one listed qualified individual indicated thereon. No listed qualified individual shall be indicated on more than one license certificate at the same time except where a place of business has one listed qualified individual with licenses issued in different classifications.
(b) As used in G.S. 87-43, the term "each separate place of business" means:
1) the one place of business of a firm in the case where an electrical contracting firm conducts its business from only one place; and
2) the principal place of business and each of the other places of business of a firm in the case where an electrical contracting firm is conducting its business from more than one place.

History Note: *Authority G.S. 87-42; 87-43; 87-43.2;*
Eff. October 1, 1988;
Amended Eff. April 1, 1993; February 1, 1990.

.0404 ANNUAL LICENSE FEES

(a) The fee for issuance of license, reissuance of license or license renewal in the various license classifications are as follows:

LICENSE FEE SCHEDULE

CLASSIFICATION	LICENSE FEE
Limited	$ 85.00
Intermediate	$130.00
Unlimited	$180.00
SP-SFD	$ 85.00
Special Restricted	$ 85.00

(b) License fees may be in the form of cash, check, money order, Visa or Mastercard made payable to the Board. Payment must accompany any license or license renewal application filed with the Board.

History Note: Authority G.S. 87-42; 87-44;
Eff. October 1, 1988;
Amended Eff. May 1, 1998; July 1, 1989;
Temporary Amendment Eff. June 30, 2000;
Temporary Amended Eff. August 31, 2001;
Amended Eff. October 1, 2017; July 1, 2015; January 1, 2008; December 4, 2002.

.0405 LICENSE RENEWAL DUE DATE

(a) License renewal applications and fees are due 30 days prior to the license expiration date. An administrative fee of twenty-five dollars ($25.00) shall be imposed upon applications received after the expiration date. Applications filed with the Board by mail shall be considered filed on the date such mail is postmarked.

(b) The Board will implement a system of staggered license renewals beginning July 1, 2002. Renewal applications for the year beginning July 1, 2002 will be mailed in the spring of 2002. Some licenses will be renewed for a 13-month period and the fee for such licenses will be the license fee set forth in rule .0404 of this section together with a one-twelfth (1/12) pro rata part of the license fee. Other renewals will be for varying monthly terms up to twenty-three (23) months and pro rata portions of the license fee for that classification will be added. Beginning July 1, 2003 all licenses will be renewed for twelve (12) month periods as the renewal date is reached.

History Note: Authority G.S. 87-42; 87-44;
Eff. October 1, 1988;
Amended Eff. February 1, 1990;
Temporary Amended Eff. August 31, 2001;
Amended July 18, 2002

.0406 RENEWAL AFTER EXPIRATION OF ANNUAL LICENSE

(a) Subject to Rule .0906 of this Subchapter, any licensee whose license has expired or been revoked solely because of failure to apply for renewal may apply and have the license renewed without further examination, and in compliance with the provisions contained in G.S. 87-44, if the applicant makes application within a period of 12 months immediately following the date the license expired.

(b) If the renewal application is filed more than 12 months immediately following the date the license expired, the applicant may have the license renewed if, during the 12 month period immediately preceding the date the application is filed with the Board, the applicant's listed qualified individual has obtained at least 500 hours of primary experience as defined in Rule .0202 of this Subchapter within the most recent 12 months, is current on the fee requirements set forth in Rule .0404 of this Section, pays the late fee set forth in Rule .0405 of this Section, and meets the continuing education requirements set forth in Rule .1101 of this Subchapter.

(c) An applicant failing to meet the requirements of Paragraphs (a) or (b) of this Rule may obtain a new license in accordance with Section .0200 of this Subchapter and Rule .0401 of this Section.

(d) The provisions of Section .0600 of this Subchapter apply to applicants whose last license expired on or before June 30, 1970. *History Note: Authority G.S. 87-42;*
Eff. October 1, 1988;
Amended Eff. March 1, 1999; February 1, 1990.
Amended Eff. July 1, 2016

.0407 NUMBERING OF LICENSES

(a) License numbers will not be related in any way to license classifications. However, each license number shall have a letter suffix added and shown on the license certificate to designate the classification of the license as follows:

Limited Classification	(License No.) - L
Intermediate Classification	(License No.) - I
Unlimited Classification	(License No.) - U
Single Family Detached Residential Dwelling Classification	(License No.) - SP-SFD
Special Restricted Classification	(License No.) - SP-With additional suffix letters denoting limitation of each such classification established by the Board.

(b) Numbers for new licenses will be assigned in numerical order following the number of the last license previously issued.

(c) A re-classified license will carry the same number as the old license which it replaces.

(d) The person who is the initial qualified individual listed on a given license shall become the permanent possessor of the license number under which that license is issued, unless such person, his legal agent, personal representative, heirs or assigns furnished to the Board specific written authorization to assign his number to another, who then will become the possessor of that number. Each successive assignee, his legal agent, personal representative, heirs or assigns shall have the right to make such assignments.

History Note: Authority G.S. 87-42; 87-43.3; 87-43.4;

Eff. October 1, 1988.

SECTION .0500 - LICENSING OPTIONS

.0501 RECLASSIFICATION OF CURRENT LICENSE

(a) A licensee may have the license classification lowered from unlimited to intermediate or limited, or from intermediate to limited, by:

1) filing with the Board, in writing, a request for the lowering of the license classification; and
2) surrendering the current license certificate to the Board for replacement as requested.

(b) A licensee may have a license that was lowered pursuant to Paragraph (a) of this Rule raised to a classification up to and including that classification from which it was lowered by:

1) filing with the Board, in writing, a request for the raising of the license classification;
2) surrendering the current license certificate to the Board for replacement as requested; and
3) paying the applicable license fee.

(c) A limited or intermediate licensee whose license has not been lowered pursuant to Paragraph (a) of this Rule may have the license classification raised to intermediate or unlimited by:

1) submitting an application on a form furnished by the Board indicating the classification of the license desired;
2) meeting all the requirements for the classification in effect when the application is made, including taking and passing the examination; and
3) paying the applicable license fee.

(d) Licenses in the single family detached residential dwelling classification and in any special restricted classification are not subject to reclassification. A change in these classifications can be effected only on the basis of a new application subject to all of the normal processing and examination requirements.

History Note: Authority G.S. 87-42; 87-43.3; 87-43.4;
Eff. October 1, 1988;
Amended Eff. October 1, 2017; March 1, 1999.

.0502 LISTED QUALIFIED INDIVIDUAL CHANGING FROM ONE LICENSE TO ANOTHER

A listed qualified individual indicated on a current active license may have his name removed from that license and added to another current active license by submitting to the Board:

1) his written request to remove his name from the license on which he is currently listed;
2) the license certificate on which he is currently listed;
3) a written request from the licensee on whose license the listed qualified individual is to be indicated, co-signed by the listed qualified individual being added; and
4) the current license certificate on which the listed qualified individual is to be indicated.

History Note: Authority G.S. 87-42; 87-43;
Eff. October 1, 1988;
Amended Eff. February 1, 1990.

.0503 LISTED QUALIFIED INDIVIDUAL OBTAINING OWN LICENSE

Any listed qualified individual on any license may have his name removed from this license and obtain his own license upon meeting any current licensing requirements he has not previously met and submitting to the Board:

1) his written request to remove his name from the license on which he is currently listed;
2) the license certificate on which he is currently listed;
3) his license application on a form furnished by the Board; and
4) payment of the appropriate license fee.

History Note: Authority G.S. 87-42; 87-43;
Eff. October 1, 1988;
Amended Eff. February 1, 1990.

.0504 QUALIFIED INDIVIDUAL - LISTING OPTIONS AFTER EXPIRATION

(a) A qualified individual who was formerly but is not now listed on any license may apply for and obtain a license upon meeting all current licensing requirements not previously met and by submitting to the Board:

1) a license application on a form furnished by the Board;
2) payment of the appropriate license fee; and
3) if more than 12 months has elapsed since the qualified individual was listed on an active license, information verifying that, during the 12 month period immediately preceding the date the application is filed with the Board, the qualified individual has obtained at least 500 hours primary experience as defined in Rule .0202 of this Subchapter within the most recent twelve months, is current on the fee requirements set forth in 21 NCAC 18B .0404, pays the late fee set forth in 21 NCAC 18B .0404 and meets the continuing education requirements set forth in 21 NCAC 18B .1101.

(b) A qualified individual who was formerly but is not now listed on any license may be listed on a current active license in the same or a lower classification as the classification of examination passed by submitting to the Board:

1) a written request from the licensee, co-signed by the qualified individual, requesting the Board to list the qualified individual on the license;
2) the licensee's current license certificate; and
3) if more than 12 months has elapsed since the qualified individual was listed on an active license, information verifying that, during the 12 month period immediately preceding the date the application is filed with the Board, the qualified individual has obtained at least 500 hours in an occupation of primary experience as defined in Rule .0202 of this Subchapter within the most recent twelve months, is current on the fee requirements set forth in 21 NCAC 18B .0404, pays the late fee set forth in 21 NCAC 18B .0404 and meets the continuing education requirements set forth in 21 NCAC 18B .1101.

History Note: *Authority G.S. 87-42; 87-43;*
Eff. October 1, 1988;
Amended Eff. October 1, 2017; July 1, 2011; March 1, 1999; February 1, 1990.

.0505 QUALIFIED INDIVIDUAL - INITIAL LISTING OPTIONS

A qualified individual who has passed the qualifying examination for a license but has never obtained a license nor been a listed qualified individual on any license shall:

1) be eligible to obtain a license in the same or lower classification as the classification of examination passed upon meeting all current licensing requirements not previously met and by submitting to the Board:
   a) a license application on a form furnished by the Board;
   b) payment of the appropriate license fee; and
   c) if more than 12 months has elapsed since the qualified individual passed the qualifying examination for a license, information verifying that, during the 12 month period immediately preceding the date the application is filed with the Board, the qualified individual has obtained at least 500 hours primary experience as defined in Rule .0202 of this Chapter within the most recent twelve months, is current on the fee requirements set forth in 21 NCAC 18B .0404, pays the late fee set forth in 21 NCAC 18B .0404 and meets the continuing education requirements set forth in 21 NCAC 18B .1101.
2) be eligible to be included as a listed qualified individual on a current active license in the same or a lower classification as the classification of examination passed upon submitting to the Board:
   a) a written request from the licensee, co-signed by the qualified individual, requesting the Board to list the qualified individual on the license;
   b) the licensee's current license certificate; and
   c) if more than 12 months has elapsed since the individual passed the qualifying examination for a license, information verifying that, during the 12 month period immediately preceding the date the application is filed with the Board, the qualified individual has obtained at least 500 hours primary experience as defined in Rule .0202 of this Chapter within the most recent twelve months, is current on the fee requirements set forth in 21 NCAC 18B .0404, pays the late fee set forth in 21 NCAC 18B .0404 and meets the continuing education requirements set forth in 21 NCAC 18B .1101.

History Note: *Authority G.S. 87-42; 87-43;*
Eff. October 1, 1988;
Amended Eff. October 1, 2017; July 1, 2011; March 1, 1999; February 1, 1990.

SECTION .0600 - RECLASSIFICATION OF FORMER CLASS I AND CLASS II LICENSES AND QUALIFIED INDIVIDUALS

.0601 LICENSES EXPIRING AND INDIVIDUALS QUALIFIED BEFORE JULY 1, 1970 (Repealed)

.0602 QUALIFIED INDIVIDUALS LISTED PRIOR TO JULY 1, 1970 (Repealed)

History Note: *Authority G.S. 87-42; 87-49;*
Eff. October 1, 1988
Amended Eff. February 1, 1996; February 1, 1990;
Repealed Eff. July 1, 2011.

SECTION .0700 - LICENSING RECIPROCITY

.0701 LICENSE BY RECIPROCITY

(a) The Board has entered into reciprocal licensing agreements with contractor licensing boards of several states whereby electrical contractors licensed by the other state boards may obtain a North Carolina electrical contracting license without written examinations provided:

1) the applicant furnishes to the Board a written statement from the state licensing board certifying that the applicant holds a current electrical contracting license issued by that board;
2) the proposed qualified individual for the applicant is the same individual who is duly qualified for the license currently issued to the applicant by the state licensing board;
3) the applicant files an application on a form provided by the Board requesting a license under the licensing reciprocity agreement currently in effect between the Board and the applicant's state licensing board;
4) except for the written examination requirement, the applicant furnishes to the Board information satisfactorily verifying to the Board that he meets all of the requirements in Sections .0200, .0300 and .0400 of this Subchapter applicable to the specific license classification requested;
5) the applicant pays to the Board the annual license fee as required in Rule .0404 of this Subchapter for the specific license classification; and
6) the license classification for which application is made is a classification for which the license from the other state is treated as equivalent under the agreement with that state.

(b) The expiration date for each license issued under a reciprocal agreement shall be as prescribed in G.S. 87-44.
(c) The renewal application due date and late filing penalty for a license issued under a reciprocal agreement shall be as prescribed in Rule .0405 of this Subchapter.
(d) Copies of all reciprocity agreements and applications are available from the Board.
(e) In the absence of a current reciprocity agreement in force between the contractor licensing board of a particular state and this Board, there is no waiver of examination.

History Note: *Authority G.S. 87-42; 87-50;*
Eff. October 1, 1988;
Amended Eff. March 1, 1999; June 1, 1993;
Amended Eff. July 1, 2011; April 15, 2003.

STATE RECIPROCAL AGREEMENTS IN EFFECT AS OF 2015

Alabama
Florida
Georgia
Louisiana
Mississippi
Ohio
South Carolina
Texas
Virginia
West Virginia

SECTION .0800 - SPECIAL RESTRICTED LICENSES

.0801 GENERAL PROVISIONS

(a) Types. A special restricted electrical contracting license classification is a classification established pursuant to G.S. 87-43.3 or by G.S. 87-43.4. Its purpose is to license persons, partnerships, firms, or corporations to engage or offer to engage in only a limited phase of electrical contracting work. Each special restricted license classification is separate from all other special restricted and regular license classifications. The General Assembly created the special restricted single family dwelling electrical contracting license in G.S. 87-43.4. Pursuant to G.S. 87-43.3, the Board has established the following special restricted electrical contracting licenses:

1) fire alarm/low voltage wiring license (FA/LV);
2) elevator license (SP-EL);
3) plumbing, heating, and air conditioning license (SP-PH);
4) groundwater pump license (SP-WP);
5) electric sign license (SP-ES); and
6) swimming pool license (SP-SP).

(b) Limited Scope. A special restricted contracting license does not authorize the licensee to engage or offer to engage in the business of electrical contracting in general. It authorizes the licensee to engage or offer to engage only in the limited phase of electrical contracting described in the Rule in this Section that specifies the scope of the applicable special restricted license.

(c) No Project Value Limit. The limitations concerning the dollar value of projects that may be undertaken by a limited or an intermediate licensee do not apply to special restricted licensees. Thus, the holder of a special restricted license may engage or offer to engage in any project authorized by the license regardless of the dollar value of the project.

(d) Effect of Regular License. A licensee in the regular license classifications, whether limited, intermediate or unlimited, is qualified to engage or offer to engage in any activity authorized by a special restricted license, subject to the project value limitations contained in G.S. 87-43.3, and does not have to obtain a special restricted license.

History Note: Authority G.S. 87-42; 87-43.3; 87-43.4;
Eff. October 1, 1988;
Amended Eff. January 1, 2010; February 1, 1995; February 1, 1990.

.0802 ESTABLISHING A SPECIAL RESTRICTED CLASSIFICATION

(a) The Board shall establish a special restricted license classification pursuant to G.S. 87-43.3 when it finds that:

1) the licensees who hold regular electrical contracting licenses are not meeting the need for the proposed electrical work to be authorized by the special restricted license; and
2) establishing the special restricted license classification serves the public interest.

(b) The Board shall establish special restricted license classifications by rule-making conducted pursuant to the requirements of G.S. 150B, Article 2A.

History Note: Authority G.S. 87-42; 87-43.3;
Eff. October 1, 1988;
Amended Eff. May 1, 1998.

.0803 SCOPE OF SP-SFD LICENSE

(a) The following definitions apply in determination of the scope of work available to the holder of a SP-SFD license:

1) "Ancillary" with reference to the scope of a single family residential dwelling is an appurtenance or an out-building or similar structure associated with the single family dwelling such as a detached residential garage or carport, a farm or household equipment storage shed, a barn, a pump house, an electric fence, or yard lighting.
2) "Habitation" means the occupancy of dwelling primarily or exclusively for residential purposes and includes the incidental use of the dwelling or its ancillaries for a business, commercial, or professional activity, such as providing hair dressing, medical, legal, consulting, or tax services, if:
   A) the activity is incidental to the primary use of the dwelling as a residence;
   B) no stock-in-trade is either displayed or sold on the premises; and
   C) the full-time or part-time services of no more than one person who does not live at the dwelling are used in the activity.
3) A "single family residential dwelling" is a building or a manufactured home that is designed and used only for habitation by one family and is not physically attached to any other building or structure. Cabanas, porches, room additions, and ancillary structures are considered part of a single family dwelling if they are designed for and used only for residential purposes by the occupants of the dwelling.

(b) A special restricted single family residential dwelling electrical contracting license (SP-SFD) authorizes the licensee to install, maintain, or repair only electrical wiring and devices that are in or on a single family residential dwelling or are ancillary to a single family residential

dwelling. Electrical work within the scope of another special restricted license can be performed by a SP-SFD licensee without obtaining the other special restricted license as long as it is in or on a single family residential dwelling or is ancillary to a single family residential dwelling.

History Note: Authority G.S. 87-42; 87-43.4;
Eff. October 1, 1988 Amended Eff. July 1, 2011.

.0804 SCOPE OF SP-FA/LV LICENSE

(a) Definition. As used in this Chapter, fire alarm, burglar alarm and low voltage wiring systems are defined as:

1) wiring systems of 50 volts or less and control circuits directly associated therewith;
2) wiring systems that have a voltage in excess of 50 volts and consist solely of power limited circuits meeting the definition of a Class II or Class III wiring system in the National Electrical Code; or paging systems not in excess of 70 volts.
3) line voltage wiring that has a voltage not in excess of 300 volts to ground and is installed from the load-side terminals of a disconnecting means or from a junction box, either of which has been installed by others, for the specific purpose of supplying the low voltage wiring system involved. Some low voltage wiring systems that meet this definition are exempt under Rule .0805;
4) interconnected components wired to a common control panel either as a stand alone fire alarm system or as part of a combination burglar/fire system to monitor and annunciate the status of evidence of flame, heat, smoke or water flow within a building or structure in accordance with the requirements of the N. C. State Building Code and NFPA 72; or
5) alarm systems or devices used to detect burglary or theft as defined in G. S. 74D-2(a).

(b) Scope. A special restricted fire alarm/low voltage electrical contracting license authorizes the licensee to install, maintain, or repair only low voltage wiring and directly related wiring. Wiring is directed related if it:

1) originates at the load-side terminals of a disconnecting means or junction box that:
   A) has been installed, complete with line-side connections, by others for the purpose of supplying the low voltage wiring system involved; and
   B) is permanently and legibly marked to identify the low voltage wiring system supplied; and
2) is not installed in a location considered as hazardous under the National Electrical Code.

History Note: Authority G.S. 87-42; 87-43.3;
Eff. October 1, 1988;
Amended Eff. July 1, 2011; January 1, 2010.

.0805 EXEMPTION OF CERTAIN LOW VOLTAGE WIRING SYSTEMS

(a) Exemption. Except a fire alarm, burglar alarm, or low voltage wiring system as defined in Rule .0804, the installation, maintenance, or repair of low voltage wiring systems may be performed by those not licensed by the Board if all of the following conditions are met:

1) the system is not required by the N.C. State Building Code;
2) the low voltage control circuit and power supply is a Class II or Class III system as defined in the National Electrical Code other than that described in Rule .0804;
3) the system operates at a voltage not in excess of 50 volts or meets the provisions for sound-recording and similar equipment in the National Electrical Code;
4) no part of the system is installed in an area considered as hazardous under the National Electrical Code;
5) the system is current limited or protected by a circuit breaker, fuse, or other current limiting device; and
6) a failure in the system would not, in the opinion of the electrical inspector having jurisdiction, create a shock or fire hazard to persons or property.

History Note: Authority G.S. 87-42; 87-43.3;
Eff. October 1, 1988;
Amended Eff. January 1, 2010.

.0806 SCOPE OF SP-EL LICENSE

A special restricted elevator electrical contracting license (SP-EL) authorizes the licensee to install, maintain, or repair electrical wiring only as an incident to the licensee's elevator, dumbwaiter, escalator, moving walk, or personnel hoist business. Furthermore, the license authorizes the licensee to install, maintain, or repair only electric wiring that:

1) is an integral part of an elevator, dumbwaiter, escalator, moving walk, or personnel hoist;
2) is electrically isolated from the building wiring by a safety switch or circuit breaker, that has been installed, complete with line-side connections, by others; and
3) originates at the load-side terminals of the protective isolating device, referred to as "beyond the disconnection means."

History Note: Authority G. S. 87-42; 87-43.3;
Eff. October 1, 1988.

.0807 SCOPE OF SP-PH LICENSE

A special restricting plumbing, heating, and air conditioning electrical contracting license (SP-PH) authorizes the licensee to install, maintain, or repair electric wiring or devices only as an incident to the licensee's plumbing, heating, or air conditioning business. Furthermore, the license authorizes the licensee to install, maintain, or repair only wiring that is directly related to plumbing, heating, or air conditioning equipment and that:

1) is restricted to circuits or parts of circuits that operate at voltages not exceeding 600 volts, phase-to-phase;
2) is electrically isolated from the building wiring system by an overcurrent protective isolating device, such as a fused switch or circuit breaker, that:
   A) has been installed, complete with line-side connections, by others;
   B) is permanently and legibly marked to identify the equipment served by the device; and
   C) is located within an enclosure intended solely for, and limited to, serving the specific plumbing, heating, or air conditioning equipment involved, or is located within a panelboard that serves the building wiring system and is likewise permanently and legibly marked to identify the equipment served by the device, provided wiring is installed by others from the load-side terminals of the device to a junction box, auxiliary gutter, or similar disconnecting means located outside the panelboard, but in sight of and within 50 feet of, the plumbing, heating, or air conditioning equipment served;

3) originates at the load-side terminals of the protective isolating device;
4) except for control wiring, is physically adjacent to the plumbing, heating, or air conditioning equipment from the equipment. Control wiring that receives its control power from the plumbing, heating, or air conditioning equipment involved may extend beyond these limits if the control voltage does not exceed 120 volts to ground and the wiring is protected from overcurrent; and
5) is not installed in a location considered as hazardous under the National Electrical Code.

History Note: Authority G.S. 87-42; 87-43.3;
Eff. October 1, 1988.

.0808 SCOPE OF SP-WP LICENSE

A special restricted groundwater pump electrical contracting license (SP-WP) authorizes the licensee to install, maintain, or repair electric wiring only as an incident to the licensee's groundwater pump business. Furthermore, the license authorizes the licensee to install, maintain, or repair only wiring that is directly related to a groundwater pump and that:

1) is restricted to circuits or parts of circuits that operate at voltages not exceeding 600 volts, phase-to-phase;
2) is electrically isolated from the building wiring system by an overcurrent protective isolating device that:
   A) has been installed, complete with line-side connections, by others;
   B) is permanently and legibly marked to identify the equipment served by the device; and
   C) is located adjacent to the controller for the specific groundwater pump equipment involved and within an enclosure intended solely for, and limited to, serving that equipment;
3) originates at the load-side terminals of the protective isolating device; and
4) is not installed in a location considered as hazardous under the National Electrical Code.

History Note: Authority G.S. 87-42; 87-43.3;
Eff. October 1, 1988.

.0809 SCOPE OF SP-ES LICENSE

(a) Definitions. As used in this Rule:

1) "Electric sign" means fixed, stationary, or portable self-contained, electrically illuminated utilization equipment that has words or symbols designed to convey information or attract attention. The term includes outline lighting.
2) "Outline lighting" means an arrangement of incandescent lamps or electric discharge tubing that outlines or otherwise calls attention to certain features, such as the shape of a building or the decoration of a window.

(b) Scope of License. A special restricted electric sign electrical contracting license (SP-ES) authorizes the licensee to install, maintain, or repair electric wiring or devices only as an incident to the licensee's electric sign business. Furthermore, the license authorizes the licensee to install, maintain, or repair only wiring that is directly related to electric signs and is electrically isolated from the building wiring system. Wiring that is directly related differs depending on the type sign involved:

1) Except for electric signs described in Paragraphs (2), (3), and (4) of this Rule, related wiring is the portion of the electric sign wiring that originates at the load-side terminals of a disconnecting means located immediately adjacent to the electric sign involved, or originates within a junction box so located. Related wiring does not include the installation of the disconnecting means, complete with line-side connections, or the installation of the junction box, complete with freelength circuit conductors to accommodate the connection of the related wiring in the box.
2) For electric sign installations having sign transformers installed physically apart from the sign, related wiring is the portion of the electric sign wiring that originates at the load-side terminals of a disconnecting means located immediately adjacent to the sign transformer supplying the electric sign involved, or originates within a junction box so located. Related wiring does not include the installation of the disconnecting means, complete with line-side connections, or the installation of the junction box, complete with free-length circuit conductors to accommodate the connection of the related wiring in the box.
3) For free-standing electric sign installations supplied through underground circuit conductors, related wiring is the portion of the electric sign wiring that originates at a wiring termination point located at, within, or immediately above the permanent base for the sign structure. Related wiring does not include the installation of:
   A) a junction box, located at, within or immediately above the permanent base for the sign, complete with free-length circuit conductors to accommodate the connection of the related wiring; or
   B) if the base of the structure is suitable for use as a raceway, the installation of bushing, complete with free-length circuit conductors extending through to accommodate the connection of the related wiring within the sign structure raceway.
4) For electric signs specifically designed to be connected directly to the building wiring raceway or cable supply, related wiring is the portion of the electric sign wiring that originates at the point where the free-length circuit conductors extend through the building wiring raceway or cable at the specifically designed supply location for the electric sign involved. Related wiring does not include the installation of the building wiring raceway or cable system to the specifically designated point of supply for the electric sign involved, complete with free-length circuit conductors extending through the building wiring raceway or cable to accommodate the connection of the related wiring.
5) Except for the related wiring on the secondary side of sign transformers, related wiring is restricted to circuits or parts of circuits that operate at voltages not exceeding 600 volts, phase-to-phase.
6) No related wiring, or any part thereof, may be installed in a location considered as hazardous under the National Electrical Code.

History Note: Authority G.S. 87-42; 87-43.3;
Eff. October 1, 1988;
Amended Eff. February 1, 1990.

.0810 SCOPE OF SP-SP LICENSE

A special restricted swimming pool electrical contracting license (SP-SP) authorizes the licensee to install, maintain, or repair swimming pool bonding work only as an incident to the licensee's business of installing, maintaining, or repairing swimming pools. Furthermore, the license authorizes the licensee to perform only the:

1) Bonding together of all of the following metal parts on or near a swimming pool installation:
   A) all metal parts of the pool structure, including the reinforcing metal of the pool shell, coping stones, and deck;

B) all forming shells;
C) all metal fittings within or attached to the pool structure; and
D) all metal conduit, metal piping, fixed metal parts.

2) Installation of a common bonding grid, bonding together all parts listed in Subdivision (1);
3) Installation of the forming shells for lighting fixtures and underwater audio equipment;
4) Installation of the conduits extending from the lighting fixture and audio equipment forming shells to deck or junction boxes and the installation of the deck or junction boxes;
5) Installation of the lighting fixtures and audio equipment in their respective forming shells from the forming shells to the deck or junction boxes, leaving appropriate leads in the deck or junction boxes to which the circuit conductors can be connected by others; and
6) Installation of a bonding conductor from the point of its connection to the common bonding grid to a readily accessible point at the circulating pump location.

History Note: Authority G.S. 87-42; 87-43.3;
Eff. October 1, 1988

SECTION .0900 - VIOLATIONS AND CONTESTED CASE HEARINGS

.0901 APPLICANTS CONVICTED OF CRIMES

The Board shall not consider the examination application of a person who has been convicted of a crime involving fraud or moral turpitude until at least one year has elapsed following the applicant's completion of the terms and conditions of any punishment for the conviction, except for unsupervised probation.

History Note: Authority G.S. 87-42; 87-43.3; 87-43.4; 87-47(a1)(4);
Eff. October 1, 1988;
Amended Eff. January 1, 2010; April 1, 1995; February 1, 1990.

.0902 CHARGES AND PRELIMINARY PROCEDURES

(a) The authority given to the Board's executive director in this Rule shall include the executive director's authority to delegate to other members of the Board's staff.

(b) Charges filed pursuant to G.S. 87-47(a4) shall be handled according to the progressive steps set out in Paragraphs (c) through (f) of this Rule.

(c) A charge shall be handled initially by the executive director. The executive director may recommend to the Board that the charge be dismissed as unfounded or trivial, without a hearing. Unless so recommended, the executive director shall:

1. issue and cause to be served on the accused a written notice of violation, including a proposed sanction pursuant to G.S. 87-47(a2) or civil penalty pursuant to G.S. 87-47(a3), or both, or
2. give the accused written notice of the charge, including a request that the accused respond to it in writing within 20 days.

(d) The executive director may, upon receipt and evaluation of the response, recommend to the Board that the charge be dismissed as unfounded or trivial, without a hearing, or the executive director may issue and cause to be served on the accused a written notice of violation, including a proposed sanction pursuant to G.S. 87-47(a2) or civil penalty pursuant to G.S. 87-47(a3), or both, or may turn the matter over to the Board's Disciplinary Review Committee.

(e) The Disciplinary Review Committee will review regularly the actions of staff, and as to any particular matter, may take the actions outlined in paragraph (c) of this Rule or may schedule a conference before the Committee with the accused. If a conference is held, the Committee shall issue its findings in the form of a Recommended Order, that shall be provided to the accused and proposed for adoption by the full board as a Final Order in the absence of objection by the accused in 20 days.

(f) The Board shall review the report and recommendations of the Disciplinary Review Committee and as to any matter may, without a hearing, dismiss the charge as unfounded or trivial, adopt the unopposed recommendations of the Committee, schedule a hearing on matters not resolved, or set an administrative hearing on the charge, notice of which may include a statement that the Board shall accept an offer in compromise pursuant to G.S. 87-47(e).

(g) Before an administrative hearing is held, the Board may direct the disciplinary review committee to meet with the accused and the complainant in a final effort to effect a settlement.

(h) Each notice of violation or Recommended Order shall include a statement of the right to request a hearing, pursuant to G.S. 87-47(a4).

History Note: Authority G.S. 87-42; 87-47;
Eff. October 1, 1988;
Amended Eff. February 1, 1996; February 1, 1990;
Amended Eff.April 15, 2003.

.0903 PRELIMINARY DETERMINATION

History Note: Authority G.S. 87-42; 87-47; 150B, Article 3A;
Eff. October 1, 1988;
Amended Eff. February 1, 1990;
Repealed Eff. February 1, 1996.

.0904 ADMINISTRATIVE HEARING PROCEDURES

The rules establishing procedures for contested cases adopted by the Office of Administrative Hearings as contained in Title 26, Chapter 3 of the North Carolina Administrative Code are hereby incorporated by reference, including subsequent amendments and editions, for contested cases for which the Board has authority to adopt rules under G.S. 150B-38(h). Provided, however, that if the case is conducted under G.S. 150B-40(b), the presiding officer shall have the powers and duties given to the Chief Administrative Law Judge or the presiding administrative law judge in Title 26, Chapter 3 of the North Carolina Administrative Code and that 26 NCAC 3 .0101(2), .0102(a)(2), .0103, .0126 and .0128 shall not apply. Copies of Title 26, Chapter 3 of the North Carolina Administrative Code are on file in the Board's office and may be obtained therefrom at the Board's actual cost of copying and mailing.

History Note: *Authority G.S. 87-42; 87-47; 150B-21.6; 150B-38(h);*
Eff. October 1, 1988; Amended Eff. May 1, 1998

.0905 J UDICIAL REVIEW
History Note: *Authority G.S. 87-47; 150B-43;*
Eff. October 1, 1988;
Amended Eff. February 1, 1990;
Repealed Eff. February 1, 1996.

.0906 LICENSE INELIGIBILITY AFTER VIOLATION
(a) Non-licensee. Any person, partnership, firm or corporation not duly licensed by the Board and found to be engaging or offering to engage in a given electrical contracting project in North Carolina shall be subject to the provisions of G.S. 87-48. Furthermore, such person, partnership, firm or corporation shall not be eligible for a qualifying examination or to obtain a license until the Board has found that any commitment to the project involving the person, partnership, firm or corporation has been voided and that the project, if continued, has been awarded to a person, partnership, firm or corporation duly licensed by the Board to engage or offer to engage in the project.
(b) Licensee. Any licensee of the Board found to be engaging or offering to engage in a given electrical contracting project in North Carolina exceeding the project limitations or scope of the licensee's current license shall be subject to the provisions of G.S. 87-47 and 87-48. Furthermore, the licensee shall not be eligible to upgrade its license to a higher or general classification, or for a qualifying examination therefor, until the Board has found that any commitment to the project involving the licensee has been voided and that the project, if continued, has been awarded to a person, partnership, firm or corporation duly licensed by the Board to engage or offer to engage in the project.
History Note: *Authority G.S. 87-42; 87-43; 87-47; 87-48;*
Eff. October 1, 1988;
Amended Eff. February 1, 1990.

.0907 RESPONSIBILITY OF LICENSEES AND QUALIFIED INDIVIDUALS
(a) "Gross negligence" within the meaning of G.S. 87-47 means such lack of due care as evidences reckless disregard of human life or the safety of the person exposed to its dangerous effects, or creating a clear and present danger of personal injury, illness or property damage, or that entire want of care as would raise the presumption of a conscious indifference to the rights of others, which is equivalent to an intentional violation of the law.
(b) "Gross incompetence" refers to such lack of knowledge, supervision or technical competence as to correspond or create risk similar to the consequences of gross negligence.
(c) "Supervision" within the meaning of G.S. 87-43 refers to that degree of attendance, participation and oversight which is necessary and sufficient to ensure that the project is carried out in a workmanlike manner, with the requisite skill and that the installation is made properly, safely and in accordance with applicable codes and rules. Supervision means active onsite review of the work by a qualified individual while the work is in progress.
History Note: *Authority G.S. 87-42; 87-50;*
Eff. April 15, 2003.

.0908 MALPRACTICE
(a) The provisions of the North Carolina Building Code, including the provisions of the National Electrical Code as modified and adopted by the Building Code Council of North Carolina from time to time, is a minimum standard of competence applicable to contractors licensed by the Board. Malpractice consists in failure to design and install systems that meet or exceed the minimum standards of the North Carolina State Building Code, Manufacturer's specifications and installation instructions and standards prevailing in the industry.
(b) Malpractice may consist in lack of knowledge of Code, Manufacturer's specifications and industry standards, in a failure to apply such technical knowledge, in undertaking a project that is not planned and supervised, or in undertaking a project that the licensee may not reasonably expect to complete timely and in accordance with codes, specifications, and industry standards.
(c) Where work is carried out by employees of the licensee, failure to provide supervision of such employees, whether by consistent absence from the workplace or jobsite, or as demonstrated by the failure of the work to comply with this rule, also constitutes malpractice on the part of the licensee.
(d) Where more than one qualified individual, as defined in G.S.87-41.1(1) is employed at a firm, each such person is responsible for the work of the firm.
History Note: *Authority G.S. 87-42; 87-47; 87-50;*
Eff. April 15, 2003.

.0909 MALPRACTICE FURTHER DEFINED
(a) A licensee of the Board shall ensure that a permit is obtained from the local Code Enforcement official before commencing any work for which a license is required by the Board and ensure that a request for final inspection is made by him, the general contractor or the owner within 10 days of completion of the work for which a license is required, absent agreement with both the owner and the local Code Enforcement official. Absent agreement with the local Code Enforcement official, the licensee is not relieved by the Board of responsibility to arrange inspection until a certificate of compliance or the equivalent is obtained from the local Code Enforcement official or the licensee has clear and convincing evidence of his effort to obtain same.
(b) A licensed contractor shall not allow a permit to be obtained or his license number to appear upon a permit except for which which he or his employees perform, over which he will provide general supervision until the completion of the work, for which he holds an executed contract with the licensed general contractor or property owner and for which he receives all contractual payments.
(c) The failure of a licensee or qualified individual to comply with the permit and inspection obligations outlined in this rule is considered by the Board as evidence of malpractice, gross incompetence or gross misconduct, in the use of license or qualification from the Board.
History Note: *Authority g.S. 87-42; 87-47; 153A-357; 160A-417;*
Eff. July 1, 2011.

SECTION .1000 – DESCRIPTION OF FORMS, CERTIFICATES AND PUBLICATIONS
(Repealed Effective March 1, 1999)

SECTION .1100 - CONTINUING EDUCATION

.1101 CONTINUING EDUCATION REQUIREMENTS: LISTED QUALIFIED INDIVIDUALS
(a) Every listed qualified individual, including listed qualified individuals pursuant to G.S. 87-50, shall complete continuing education for each license period (July 1 - June 30) to renew the license on which the qualified individual is currently listed, for the next license period, except as follows:

1. individuals becoming qualified by examination during the 12 month period immediately preceding the license renewal date;
2. qualified individuals unable to fulfill the required number of hours as the result of illness as certified in writing by the attending physician; or
3. persons presenting approved courses of continuing education.

(b) The number of required contact hours for every listed qualified individual shall be determined by the classification of license on which the qualified individual is currently listed as follows:

1. qualified individuals currently listed on a license in the limited, intermediate, unlimited and special restricted single family dwelling classifications shall complete at least eight hours of approved continuing education for license renewal; and
2. qualified individuals currently listed on a license in the special restricted fire alarm/low voltage (FALV), special restricted elevator (SP-EL), special restricted plumbing and heating (SP-PH), special restricted ground water pump (SP–WP), special restricted electric sign (SP-ES) and special restricted swimming pool (SP-SP) classifications shall complete at least four hours of approved continuing education for license renewal.

(c) The Board, pursuant to Rules .1102 and .1103 of the Section, approves courses. Because of differences in the electrical contracting industry and individual needs of listed qualified individuals, each qualified individual must exercise judgment in selecting courses for which continuing education is claimed and in choosing only those courses that will advance the individual's knowledge.
(d) Course sponsors may be colleges or universities, community colleges, trade associations, providers of self-study programs, employers, third party professional examination companies, private instructors and the like.
(e) North Carolina listed qualified individuals residing within the state must obtain the required continuing education hours by taking a course provided by an approved sponsor.
(f) North Carolina listed qualified individuals residing outside of North Carolina, including listed qualified individuals pursuant to G.S. 87-50, may obtain credit for courses offered in North Carolina. They may also obtain credit for courses offered in their state, province or country of residence provided the Board subsequently approves the courses taken, pursuant to Rule .1102(b) of this Section.
(g) Effective for renewals on or after July 1, 2008, all persons seeking to renew qualification must demonstrate that a minimum of one-half the continuing education hours for each annual license period were obtained by in-person classroom or seminar attendance.
History Note: Authority G.S. 87-42; 87-44.1;
Eff. October 1, 1990;
Amended Eff. January 1, 2010; January 1, 2006; March 1, 1990.

.1102 MINIMUM REQUIREMENTS FOR COURSE SPONSOR APPROVAL
(a) Each course sponsor shall submit an application for continuing education course sponsor approval to the Board on a form provided by the Board by March 1 of the year prior to the license period (July 1 - June 30) in which the course will be offered. The application shall include:

1. the name of the sponsor;
2. sponsor contact person, address, telephone number and email address;
3. course title and outline;
4. course contact hours;
5. schedule of courses, if established, including dates, time and locations;
6. course fee; and
7. names and credentials of each instructor.

(b) To qualify as an approved continuing education course sponsor:

1. all courses offered by the sponsor shall last no fewer than the minimum number of contact hours required for the license classification pursuant to Rule .1101(b) of this Section; and
2. all courses offered by the sponsor shall cover articles of the current National Electrical Code, NFPA 72 and reference materials for Fire Alarm Systems; G.S. 87, Article 4; 21 NCAC 18B; or other subject matter satisfying the requirements in G.S. 87-44.1 as approved by the Board.

(c) The course sponsor or instructor shall provide the Board with a certified class roster of all attending qualified individuals within 10 days after the completion of each course.
(d) The course sponsor or instructor shall provide each attending qualified individual with a certificate of completion within 10 days after completion of each course.
(e) The Board shall approve or deny applications at its regular scheduled meetings.
(f) Upon approval of the application, each approved sponsor shall agree to conduct courses in accordance with this Section and the applicant shall indicate its agreement by signing a continuing education sponsor agreement form provided by the Board.
History Note: Authority G.S. 87-42; 87-44.1;
Eff. October 1, 1990;
Amended Eff. July 1, 2011; January 1, 2010; January 1, 2006; March 1, 1999.

.1103 MINIMUM REQUIREMENTS FOR COURSE INSTRUCTOR APPROVAL

(a) Each course instructor shall submit an application for continuing education course instructor approval to the Board on a form provided by the Board by March 1 of the year prior to the fiscal year (July 1 - June 30) in which the course will be offered. The application shall include but is not limited to:

1. The name of the instructor;
2. Instructor's address, telephone number and email address;
3. The name of the course sponsor;
4. Course title;
5. Course contact hours; and
6. Qualifications of instructor.

(b) The Board shall approve courses when:

1. The proposed course outline demonstrates content related to the technical, practical and business aspects of electrical contracting so as to have educational value consistent with the number of hours credit sought and the class is to be offered at a location conducive to learning; and
2. The course is to be taught by qualified individuals as defined in G.S. 87-41.1, by persons who have demonstrated subject matter knowledge on a test administered by the Board, by persons holding qualifications as a code enforcement official issued by the Code Official Qualification Board or by persons who otherwise establish knowledge of the material in the course outline.

(c) The Board may deny an application for course approval if it finds that the sponsor or proposed instructor has previously failed to comply with the terms of any agreement as provided in Paragraph (g) of this Rule or the rules of the Board.

(d) The application for course approval shall be submitted together with the application for continuing education course sponsor approval as prescribed in Rule .1102 of this Section.

(e) The Board shall approve or deny applications at a regular meeting.

(f) Appeals from denials shall be heard by the Board at the next scheduled meeting of the Board.

(g) Upon approval of a course, sponsor and the instructor teaching the approved course shall agree to conduct courses in accordance with this Section and the information represented on the application, and shall indicate his agreement by signing a continuing education agreement form provided by the Board.

History Note: Statutory Authority G.S. 87-42; 87-44.1;
Eff. October 1, 1990;
Amended Eff. July 1, 2011; January 1, 2006; April 1, 1993.

.1104 CONTACT HOURS

(a) Approved courses must be offered for no fewer than two contact hours.

(b) Credit shall be granted to the qualified individual only upon completion of an entire course.

(c) When a qualified individual has completed more than the required number of hours of continuing education in any one license period, the extra hours shall be carried forward in multiples as specified in Paragraph (a) of this Rule and treated as hours earned in the following one or two additional license periods.

(d) No credit shall be granted for courses attended prior to being qualified by examination.

History Note: Authority G.S. 87-42; 87-44.1;
Eff. October 1, 1990;
Amended Eff. February 1, 2006; March 1, 1999.

.1105 COMPUTATION OF CONTINUING EDUCATION HOURS

(a) Group Courses: Non-college. Continuing education credit for a group course that is not part of a college curriculum is given based on contact hours. A contact hour is 50 minutes of instruction. Credit is granted only for full contact hours.

(b) College Courses. Continuing education credit for a college course in the college curriculum is given based on college credit hours. One semester hour of college credit is 16 contact hours; and one continuing education unit is 10 contact hours.

(c) Self-Study Courses. Continuing education credit for a self-study course is given based on the average number of contact hours needed to complete the course. The course shall include a study text and a written examination having a minimum of 25 questions for each two contact hours course credit and a minimum passing grade of 70. A sponsor must determine the average number of contact hours it takes to complete the self-study course and submit this information with its application for continuing education course sponsor approval.

(d) Examination. Continuing education credit for an examination is given based on the type of examination, number of questions, number of hours permitted to take the examination, and passing grade. The examination shall include a minimum of 25 questions for each two contact hours course credit and a minimum passing grade of 70. A sponsor must set the number of hours permitted to take the examination and submit this information with its application for continuing education course sponsor approval.

(e) Totaling Annual Hours. No credit shall be allowed for a course having fewer than two contact hours required for the license classification pursuant to Rule .1101(b) of this Section. Credit hours for more than one year are subject to the provisions of Rule .1104(c) of this Section.

History Note: Authority G.S. 87-42; 87-44.1;
Eff. October 1, 1990;
Amended Eff. January 1, 2006; March 1, 1999.

.1106 LIST OF APPROVED COURSE SPONSORS AND INSTRUCTORS

In July of each year the Board shall post a link to the Board website that shall include:

1. All approved course sponsors and instructors for that fiscal year; and
2. Contact information for all approved course sponsors and instructors.

History Note: Statutory Authority G.S. 87-42; 87-44.1;
Eff. October 1, 1990;
Amended Eff. January 1, 2006.

.1107 ADVERTISEMENTS BY APPROVED COURSE SPONSORS AND INSTRUCTORS

Approved course sponsors and instructors who state in their advertisements, brochures or other course descriptions that a particular course meets the requirement of the North Carolina State Board of Examiners of Electrical Contractors for continuing education shall so state exactly as follows:

> This course, when offered during fiscal year _____, meets the requirements of the North Carolina State Board of Examiners of Electrical Contractors for ____ contact hours of continuing education credit. This course is not sponsored by the Board.

History Note: Statutory Authority G.S. 87-42; 87-44.1;
Eff. October 1, 1990.

.1108 REVOCATION OF COURSE SPONSOR OR INSTRUCTOR APPROVAL

(a) The Board may revoke, suspend or terminate the agreement with any approved continuing education course sponsor and/or instructor if the Board determines that either has failed to comply with the terms of the agreement or the Rules of the Board.

(b) The Board shall have the authority to monitor courses to determine whether the course sponsor and instructor are complying with the terms of the agreement and the rules of the Board.

History Note: Statutory Authority G.S. 87-42; 87-44.1;
Eff. October 1, 1990.

66-23. Sale of electrical goods regulated.
66-24. Identification marks required.
66-25. Acceptable listings as to safety of goods.
66-26. Legal responsibility of proper installations unaffected.
66-27. Violation made misdemeanor.
66-27.01. Enforcement.

§ 66-23. Sale of electrical goods regulated.
Every person, firm or corporation before selling, offering for sale, assigning, or disposing of by gift as premiums or in any similar manner any electrical material, devices, appliances or equipment shall first determine if such electrical materials, devices, appliances and equipment comply with the provision of this Article. (1933, c. 555, s. 1; 1989, c. 681, s. 1.)

§ 66-24. Identification marks required.
All electrical materials, devices, appliances and equipment shall have the maker's name, trademark, or other identification symbol placed thereon, together with such other markings giving voltage, current, wattage, or other appropriate ratings as may be necessary to determine the character of the material, device, appliance or equipment and the use for which it is intended; and it shall be unlawful for any person, firm or corporation to remove, alter, change or deface the maker's name, trademark or other identification symbol. (1933, c. 555, s. 2; 1989, c. 681, s. 1.)

§ 66-25. Acceptable listings as to safety of goods.
(a) All electrical materials, devices, appliances, and equipment shall be evaluated for safety and suitability for intended use. Except as provided in subsection (b) of this section, this evaluation shall be conducted in accordance with nationally recognized standards and shall be conducted by a qualified testing laboratory. The Commissioner of Insurance, through the Engineering Division of the Department of Insurance, shall implement the procedures necessary to approve suitable national standards and to approve suitable qualified testing laboratories. The Commissioner may assign his authority to implement the procedures for specific materials, devices, appliances, or equipment to other agencies or bodies when they would be uniquely qualified to implement those procedures. In the event that the Commissioner determines that electrical materials, devices, appliances, or equipment in question cannot be adequately evaluated through the use of approved national standards or by approved qualified testing laboratories, the Engineering Division of the Department of Insurance shall specify any alternative evaluations which safety requires. The Engineering Division of the Department of Insurance shall keep in file, where practical, copies of all approved national standards and resumes of approved qualified testing laboratories.
(b) Electrical devices, appliances, or equipment used by the Division of Adult Correction of the Department of Public Safety in institutional kitchens and manufacturing equipment used by Correction Enterprises are exempt from the evaluation requirement of subsection (a) of this section. (1933, c. 555, s. 3; 1989, c. 681, s. 1; 2013-289, s. 11; 2014-100, s. 16C.4; 2015-241, s. 16C.13A.)

§ 66-26. Legal responsibility of proper installations unaffected.
This Article shall not be construed to relieve from or to lessen the responsibility or liability of any party owning, operating, controlling or installing any electrical materials, devices, appliances or equipment for damages to persons or property caused by any defect therein, nor shall the electrical inspector, the Commissioner, or agents of the Commissioner be held as assuming any such liability by reason of the approval of any material, device, appliance or equipment authorized herein. (1933, c. 555, s. 4; 1989, c. 681, s. 1.)

§ 66-27. Violation made misdemeanor.
Any person, firm or corporation who shall violate any of the provisions of this Article shall be guilty of a Class 2 misdemeanor. (1933, c. 555, s. 5; 1989, c. 681, s. 1; 1993, c. 539, s. 509; 1994, Ex. Sess., c. 24, s. 14(c).)

§ 66-27.01. Enforcement.
The Commissioner or his designee or the electrical inspector of any State or local governing agency may initiate any appropriate action or proceedings to prevent, restrain, or correct any violation of this Article. The Commissioner or his designee, upon showing proper credentials and in discharge of his duties pursuant to this Article may, at reasonable times and without advance notice, enter and inspect any facility within the State in which there is reasonable cause to suspect that electrical materials, devices, appliances, or equipment not in conformance with the requirements of this Article are being sold, offered for sale, assigned, or disposed of by gift, as premiums, or in any other similar manner. (1989, c. 681, s. 1; 1997-456, s. 27.)

CHAPTER 153A-PART 4
Building Inspection (Counties).

153A-350. “Building” defined.
153A-350.1. Tribal lands
153A-351. Inspection department; certification of electrical inspectors.
153A-351.1. Qualifications of inspectors.
153A-352. Duties and responsibilities.
153A-353. Joint inspection department; other arrangements.
153A-354. Financial support.
153A-355. Conflicts of interest.
153A-356. Failure to perform duties.
153A-357. Permits.
153A-358. Time limitations on validity of permits.
153A-359. Changes in work.
153A-360. Inspections of work in progress.
153A-361. Stop orders.
153A-362. Revocation of permits.
153A-363. Certificates of compliance.
153A-364. Periodic inspections for hazardous or unlawful conditions.
153A-365. Defects in buildings to be corrected.
153A-366. Unsafe buildings condemned.
153A-367. Removing notice from condemned building.
153A-368. Action in event of failure to take corrective action.
153A-369. Order to take corrective action.
153A-370. Appeal; finality of order not appealed.
153A-371. Failure to comply with order.
153A-372. Equitable enforcement.
153A-373. Records and reports.
153A-374. Appeals.
153A-375. Establishment of fire limits.

§ 153A-350. "Building" defined.
As used in this Part, the words "building" or "buildings" include other structures. (1973, c. 822, s. 1.)

§ 153A-350.1. Tribal lands.
As used in this Part, the term:
1) "Board of commissioners" includes the Tribal Council of such tribe.
2) "County" or "counties" also means a federally recognized Indian Tribe, and as to such tribe includes lands held in trust for the tribe. (1999-78, s. 1.)

§ 153A-351. Inspection department; certification of electrical inspectors.
(a) A county may create an inspection department, consisting of one or more inspectors who may be given the titles of building inspector, electrical inspector, plumbing inspector, housing inspector, zoning inspector, heating and air-conditioning inspector, fire prevention inspector, deputy or assistant inspector, or any other title that is generally descriptive of the duties assigned. The department may be headed by a superintendent or director of inspections.
(a1) Every county shall perform the duties and responsibilities set forth in G.S. 153A-352 either by:
1) Creating its own inspection department;
2) Creating a joint inspection department in cooperation with one or more other units of local government, pursuant to G.S. 153A-353 or Part 1 of Article 20 of Chapter 160A; or,
3) Contracting with another unit of local government for the provision of inspection services pursuant to Part 1 of Article 20 of Chapter 160A.

Such action shall be taken no later than the applicable date in the schedule below, according to the county's population as published in the 1970 United States Census:
Counties over 75,000 population - July 1, 1979
Counties between 50,001 and 75,000 - July 1, 1981
Counties between 25,001 and 50,000 - July 1, 1983
Counties 25,000 and under - July 1, 1985.
In the event that any county shall fail to provide inspection services by the date specified above or shall cease to provide such services at any time thereafter, the Commissioner of Insurance shall arrange for the provision of such services, either through personnel employed by his Department or through an arrangement with other units of government. In either event, the Commissioner shall have and may exercise within the county's jurisdiction all powers made available to the board of county commissioners with respect to building inspection under Part 4 of Article 18 of this Chapter and Part 1 of Article 20 of Chapter 160A. Whenever the Commissioner has intervened in this manner, the county may assume provision of inspection services only after giving the Commissioner two years' written notice of its intention to do so; provided, however, that the Commissioner may waive this requirement or permit assumption at an earlier date if he finds that such earlier assumption will not unduly interfere with arrangements he has made for the provision of those services.
(b) No person may perform electrical inspections pursuant to this Part unless he has been certified as qualified by the Commissioner of Insurance. To be certified a person must pass a written examination based on the electrical regulations included in the latest edition of the State Building Code as filed with the Secretary of State. The examination shall be under the supervision of and conducted according to rules and regulations prescribed by the Chief State Electrical Inspector or Engineer of the State Department of Insurance and the Board of Examiners

of Electrical Contractors. It shall be held quarterly, in Raleigh or any other place designated by the Chief State Electrical Inspector or Engineer.

The rules and regulations may provide for the certification of class I, class II, and class III inspectors, according to the results of the examination. The examination shall be based on the type and character of electrical installations being made in the territory in which the applicant wishes to serve as an electrical inspector. A class I inspector may serve anywhere in the State, but class II and class III inspectors shall be limited to service in the territory for which they have qualified.
The Commissioner of Insurance shall issue a certificate to each person who passes the examination, approving the person for service in a designated territory. To remain valid, a certificate must be renewed each January by payment of an annual renewal fee of one dollar ($1.00). The examination fee shall be five dollars ($5.00).

If the person appointed by a county as electrical inspector fails to pass the examination, the county shall continue to make appointments until an appointee has passed the examination. For the interim the Commissioner of Insurance may authorize the county to use a temporary inspector.

The provisions of this subsection shall become void and ineffective on such date as the North Carolina Code Officials Qualification Board certifies to the Secretary of State that it has placed in effect a certification system for electrical inspectors pursuant to its authority granted by Article 9C of Chapter 143 of the General Statutes. (1937, c. 57; 1941, c. 105; 1947, c. 719; 1951, c. 651; 1953, c. 984; 1955, cc. 144, 942, 1171; 1957, cc. 415, 456, 1286, 1294; 1959, cc. 399, 940, 1031; 1961, cc. 763, 884, 1036; 1963, cc. 639, 868; 1965, cc. 243, 371, 453, 494, 846; 1967, cc. 45, 73, 113; c. 495, ss. 1, 3; 1969, cc. 675, 918; c. 1003, s. 7; c. 1010, s. 4; c. 1064, ss. 1, 4, 5; c. 1066, s. 1; 1973, c. 822, s. 1; 1977, c. 531, ss. 2, 3; 1991, c. 720, s. 77.)

§ 153A-351.1. Qualifications of inspectors.
On and after the applicable date set forth in the schedule in G.S. 153A-351, no county shall employ an inspector to enforce the State Building Code as a member of a county or joint inspection department who does not have one of the following types of certificates issued by the North Carolina Code Officials Qualification Board attesting to his qualifications to hold such position: (i) a probationary certificate, valid for one year only; (ii) a standard certificate; or (iii) a limited certificate, which shall be valid only as an authorization for him to continue in the position held on the date specified in G.S. 143-151.10(c) and which shall become invalid if he does not successfully complete in-service training prescribed by the Qualification Board within the period specified in G.S. 143-151.10(c). An inspector holding one of the above certificates can be promoted to a position requiring a higher level certificate only upon issuance by the Board of a standard certificate or probationary certificate appropriate for such new position. (1977, c. 531, s. 4.)

§ 153A-352. Duties and responsibilities.
(a) The duties and responsibilities of an inspection department and of the inspectors in it are to enforce within the county's territorial jurisdiction State and local laws and local ordinances and regulations relating to:
1) The construction of buildings;
2) The installation of such facilities as plumbing systems, electrical systems, heating systems, refrigeration systems, and air-conditioning systems;
3) The maintenance of buildings in a safe, sanitary, and healthful condition;
4) Other matters that may be specified by the board of commissioners.

(a1) The duties and responsibilities set forth in subsection (a) of this section include receiving applications for permits and issuing or denying permits, making necessary inspections in a timely manner, issuing or denying certificates of compliance, issuing orders to correct violations, bringing judicial actions against actual or threatened violations, keeping adequate records, and taking any other actions that may be required to adequately enforce the laws and ordinances and regulations. The board of commissioners may enact reasonable and appropriate provisions governing the enforcement of the laws and ordinances and regulations.
(b) Except as provided in G.S. 153A-364, a county may not adopt a local ordinance or resolution or any other policy that requires regular, routine inspections of buildings or structures constructed in compliance with the North Carolina Residential Code for One- and Two-Family Dwellings in addition to the specific inspections required by the North Carolina Building Code without first obtaining approval from the North Carolina Building Code Council. The North Carolina Building Code Council shall review all applications for additional inspections requested by a county and shall, in a reasonable manner, approve or disapprove the additional inspections. This subsection does not limit the authority of the county to require inspections upon unforeseen or unique circumstances that require immediate action. In performing the specific inspections required by the North Carolina Building Code, the inspector shall conduct all inspections requested by the permit holder for each scheduled inspection visit. For each requested inspection, the inspector shall inform the permit holder of instances in which the work inspected is incomplete or otherwise fails to meet the requirements of the North Carolina Residential Code for One- and Two-Family Dwellings.
(c) Notwithstanding the requirements of this Article, a county shall accept and approve, without further responsibility to inspect, a design or other proposal for a component or element in the construction of buildings from a licensed architect or licensed engineer provided all of the following apply:
1) The submission is completed under valid seal of the licensed architect or licensed engineer.
2) Field inspection of the installation or completion of construction component or element of the building is performed by that licensed architect or licensed engineer.
3) That licensed architect or licensed engineer provides the county with a signed written document stating the component or element of the building so inspected is in compliance with the North Carolina State Building Code or the North Carolina Residential Code for One- and Two-Family Dwellings.

(d) Upon the acceptance and approval of a signed written document by the county as required under subsection (c) of this section, the county, its inspection department, and the inspectors shall be discharged and released from any duties and responsibilities imposed by this Article with respect to the component or element in the construction of the building for which the signed written document was submitted. (1937, c. 57; 1941, c. 105; 1947, c. 719; 1951, c. 651; 1953, c. 984; 1955, cc. 144, 942, 1171; 1957, cc. 415, 456, 1286, 1294; 1959, cc. 399,

940, 1031; 1961, cc. 763, 884, 1036; 1963, cc. 639, 868; 1965, cc. 243, 371, 453, 494, 846; 1967, cc. 45, 73, 113; c. 495, ss. 1, 3; 1969, cc. 675, 918; c. 1003, s. 7; c. 1010, s. 4; c. 1064, ss. 1, 4, 5; c. 1066, s. 1; 1973, c. 822, s. 1; 2013-118, s. 1(a); 2015-145, ss. 8.1, 9(a).)

§ 153A-353. Joint inspection department; other arrangements.

A county may enter into and carry out contracts with one or more other counties or cities under which the parties agree to create and support a joint inspection department for enforcing those State and local laws and local ordinances and regulations specified in the agreement. The governing bodies of the contracting units may make any necessary appropriations for this purpose.

In lieu of a joint inspection department, a county may designate an inspector from another county or from a city to serve as a member of the county inspection department, with the approval of the governing body of the other county or city. A county may also contract with an individual who is not a city or county employee but who holds one of the applicable certificates as provided in G.S. 153A-351.1 or G.S. 160A-411.1 or with the employer of an individual who holds one of the applicable certificates as provided in G.S. 153A-351.1 or G.S. 160A-411.1. The inspector, if designated from another county or city under this section, while exercising the duties of the position, is a county employee. The county shall have the same potential liability, if any, for inspections conducted by an individual who is not an employee of the county as it does for an individual who is an employee of the county. The company or individual with whom the county contracts shall have errors and omissions and other insurance coverage acceptable to the county. (1937, c. 57; 1941, c. 105; 1947, c. 719; 1951, c. 651; 1959, c. 940; 1963, c. 639; 1965, c. 371; 1967, c. 495, s. 1; 1969, c. 918; c. 1010, s. 4; c. 1064, ss. 1, 5; c. 1066, s. 1; 1973, c. 822, s. 1; 1993, c. 232, s. 1; 1999-372, s. 1; 2001-278, s. 1.)

§ 153A-354. Financial support.

A county may appropriate any available funds for the support of its inspection department. It may provide for paying inspectors fixed salaries, or it may reimburse them for their services by paying over part or all of any fees collected. It may fix reasonable fees for issuing permits, for inspections, and for other services of the inspection department. All fees collected under the authority set forth in this section shall be used for support of the administration and activities of the inspection department and for no other purpose. (1937, c. 57; 1941, c. 105; 1947, c. 719; 1951, c. 651; 1953, c. 984; 1955, cc. 144, 942, 1171; 1957, cc. 415, 456, 1286, 1294; 1959, cc. 399, 940, 1031; 1961, cc. 763, 884, 1036; 1963, cc. 639, 868; 1965, cc. 243, 371, 453, 494, 846; 1967, cc. 45, 73, 113; c. 495, ss. 1, 3; 1969, cc. 675, 918; c. 1003, s. 7; c. 1010, s. 4; c. 1064, ss. 1, 4, 5; c. 1066, s. 1; 1973, c. 822, s. 1; 2015-145, s. 7.1.)

§ 153A-355. Conflicts of interest.

Unless he or she is the owner of the building, no member of an inspection department shall be financially interested or employed by a business that is financially interested in furnishing labor, material, or appliances for the construction, alteration, or maintenance of any building within the county's territorial jurisdiction or any part or system thereof, or in making plans or specifications therefor. No member of any inspection department or other individual or an employee of a company contracting with a county to conduct inspections may engage in any work that is inconsistent with his or her duties or with the interest of the county, as determined by the county. The county must find a conflict of interest if any of the following is the case:

1) If the individual, company, or employee of a company contracting to perform inspections for the county has worked for the owner, developer, contractor, or project manager of the project to be inspected within the last two years.
2) If the individual, company, or employee of a company contracting to perform inspections for the county is closely related to the owner, developer, contractor, or project manager of the project to be inspected.
3) If the individual, company, or employee of a company contracting to perform inspections for the county has a financial or business interest in the project to be inspected. (1937, c. 57; 1941, c. 105; 1947, c. 719; 1951, c. 651; 1953, c. 984; 1955, cc. 144, 942, 1171; 1957, cc. 415, 456, 1286, 1294; 1959, cc. 399, 1031; 1961, cc. 763, 884, 1036; 1963, c. 868; 1965, cc. 243, 453, 494, 846; 1967, cc. 45, 73, 113; c. 495, s. 3; 1969, cc. 675, 918; c. 1003, s. 7; c. 1064, ss. 1, 4; c. 1066, s. 1; 1973, c. 822, s. 1; 1993, c. 232, s. 2; 1999-372, s. 2.)

§ 153A-356. Failure to perform duties.

(a) If a member of an inspection department willfully fails to perform the duties required of him by law, or willfully improperly issues a permit, or gives a certificate of compliance without first making the inspections required by law, or willfully improperly gives a certificate of compliance, he is guilty of a Class 1 misdemeanor.

(b) A member of the inspection department shall not be in violation of this section when the county, its inspection department, or one of the inspectors accepted a signed written document of compliance with the North Carolina State Building Code or the North Carolina Residential Code for One- and Two-Family Dwellings from a licensed architect or licensed engineer in accordance with G.S. 153A-352(c). (1969, c. 1066, s. 1; 1973, c. 822, s. 1; 1993, c. 539, s. 1064; 1994, Ex. Sess., c. 24, s. 14(c); 2015-145, s. 9(b).)

§ 153A-357. Permits.

(a) Except as provided in subsection (a2) of this section, no person may commence or proceed with any of the following without first securing from the inspection department with jurisdiction over the site of the work each permit required by the State Building Code and any other State or local law or local ordinance or regulation applicable to the work:

1) The construction, reconstruction, alteration, repair, movement to another site, removal, or demolition of any building.
2) The installation, extension, or general repair of any plumbing system except that in any one- or two-family dwelling unit a permit shall not be required for the connection of a water heater that is being replaced, provided that the work is performed by a person licensed under G.S. 87-21, who personally examines the work at completion and ensures that a leak test has been performed on the gas piping, and provided the energy use rate or thermal input is not greater than that of the water heater which is being replaced, there is no change in fuel, energy source, location, capacity, or routing or sizing of venting and piping, and the replacement is installed in accordance with the current edition of the State Building Code.
3) The installation, extension, alteration, or general repair of any heating or cooling equipment system.
4) The installation, extension, alteration, or general repair of any electrical wiring, devices, appliances, or equipment except that in any one- or two-family dwelling unit a permit shall not be required for repair or replacement of electrical lighting fixtures or devices, such as receptacles and lighting switches, or for the connection of an existing branch circuit to an electric water heater that is being replaced, provided that all of the following requirements are met:

a. With respect to electric water heaters, the replacement water heater is placed in the same location and is of the same or less capacity and electrical rating as the original.
b. With respect to electrical lighting fixtures and devices, the replacement is with a fixture or device having the same voltage and the same or less amperage.
c. The work is performed by a person licensed under G.S. 87-43.
d. The repair or replacement installation meets the current edition of the State Building Code, including the State Electrical Code.

However, a permit is not required for the installation, maintenance, or replacement of any load control device or equipment by an electric power supplier, as defined in G.S. 62-133.8, or an electrical contractor contracted by the electric power supplier, so long as the work is subject to supervision by an electrical contractor licensed under Article 4 of Chapter 87 of the General Statutes. The electric power supplier shall provide such installation, maintenance, or replacement in accordance with (i) an activity or program ordered, authorized, or approved by the North Carolina Utilities Commission pursuant to G.S. 62-133.8 or G.S. 62-133.9 or (ii) a similar program undertaken by a municipal electric service provider, whether the installation, modification, or replacement is made before or after the point of delivery of electric service to the customer. The exemption under this subdivision applies to all existing installations.

(a1) A permit shall be in writing and shall contain a provision that the work done shall comply with the State Building Code and all other applicable State and local laws and local ordinances and regulations. Nothing in this section shall require a county to review and approve residential building plans submitted to the county pursuant to Section R-110 of Volume VII of the North Carolina State Building Code; provided that the county may review and approve such residential building plans as it deems necessary. No permit may be issued unless the plans and specifications are identified by the name and address of the author thereof; and if the General Statutes of North Carolina require that plans for certain types of work be prepared only by a licensed architect or licensed engineer, no permit may be issued unless the plans and specifications bear the North Carolina seal of a licensed architect or of a licensed engineer. If a provision of the General Statutes of North Carolina or of any ordinance requires that work be done by a licensed specialty contractor of any kind, no permit for the work may be issued unless the work is to be performed by such a duly licensed contractor.

(a2) No permit issued under Articles 9 or 9C of G.S. Chapter 143 shall be required for any construction, installation, repair, replacement, or alteration performed in accordance with the current edition of the North Carolina State Building Code and costing fifteen thousand dollars ($15,000) or less in any single-family residence or farm building unless the work involves any of the following:

1. The addition, repair or replacement of load bearing structures. However, no permit is required for replacements of windows, doors, exterior siding, or the pickets, railings, stair treads, and decking of porches and exterior decks.
2. The addition or change in the design of plumbing. However, no permit is required for replacements otherwise meeting the requirements of this subsection that do not change size or capacity.
3. The addition, replacement or change in the design of heating, air conditioning, or electrical wiring, devices, appliances, or equipment, other than like-kind replacement of electrical devices and lighting fixtures.
4. The use of materials not permitted by the North Carolina Residential Code for One- and Two-Family Dwellings.
5. The addition (excluding replacement) of roofing.

(g) Violation of this section constitutes a Class 1 misdemeanor.

(a3) A county shall not require more than one permit for the complete installation or replacement of any natural gas, propane gas, or electrical appliance on an existing structure when the installation or replacement is performed by a person licensed under G.S. 87-21 or G.S. 87-43. The cost of the permit for such work shall not exceed the cost of any one individual trade permit issued by that county, nor shall the county increase the costs of any fees to offset the loss of revenue caused by this provision.

(b) No permit shall be issued pursuant to subsection (a) for any land-disturbing activity, as defined in G.S. 113A-52(6), for any activity covered by G.S. 113A-57, unless an erosion and sedimentation control plan has been approved by the Sedimentation Pollution Control Commission pursuant to G.S. 113A-54(d)(4) or by a local government pursuant to G.S. 113A-61 for the site of the activity or a tract of land including the site of the activity.

(c)

1) A county may by ordinance provide that a permit may not be issued under subsection (a) of this section to a person who owes delinquent property taxes, determined under G.S. 105-360, on property owned by the person. Such ordinance may provide that a building permit may be issued to a person protesting the assessment or collection of property taxes.
2) This subsection applies to Alexander, Alleghany, Anson, Bertie, Catawba, Chowan, Currituck, Davie, Gates, Greene, Lenoir, Lincoln, Iredell, Sampson, Stokes, Surry, Tyrrell, Wayne, and Yadkin Counties only.

(d) Repealed by Session Laws 2014-115, s. 15(a), effective August 11, 2014.

(e) No permit shall be issued pursuant to subdivision (1) of subsection (a) of this section where the cost of the work is thirty thousand dollars ($30,000) or more, other than for improvements to an existing single-family residential dwelling unit as defined in G.S. 87-15.5(7) that the owner occupies as a residence, or for the addition of an accessory building or accessory structure as defined in the North Carolina Uniform Residential Building Code, the use of which is incidental to that residential dwelling unit, unless the name, physical and mailing address, telephone number, facsimile number, and electronic mail address of the lien agent designated by the owner pursuant to G.S. 44A-11.1(a) is conspicuously set forth in the permit or in an attachment thereto. The building permit may contain the lien agent's electronic mail address. The lien agent information for each permit issued pursuant to this subsection shall be maintained by the inspection department in the same manner and in the same location in which it maintains its record of building permits issued.

(f) No county may withhold issuing a building permit or certificate of occupancy that otherwise would be eligible to be issued under this section to compel, with respect to another property or parcel, completion of work for a separate permit or compliance with land use regulations under this Article unless otherwise authorized by law or unless the county reasonably determines the existence of a public safety issue directly related to the issuance of a building permit or certificate of occupancy. (1969, c. 1066, s. 1; 1973, c. 822, s. 1; 1981, c. 677, s. 2; 1983, c. 377, s. 2; c. 614, s. 2; 1987 (Reg. Sess., 1988), c. 1000, s. 1; 1993, c. 539, s. 1065; 1994, Ex. Sess., c. 24, s. 14(c); 1993 (Reg. Sess., 1994), c. 741, s. 1; 2002-165, s. 2.19; 2005-433, s. 3; 2006-150, s. 2; 2007-58, s. 1; 2008-198, s. 8(c); 2009-117, s. 1; 2009-532, s. 2; 2010-30, s. 3; 2012-23, s. 2; 2012-158, s. 6; 2013-58, s. 2; 2013-117, s. 6; 2013-160, s. 1; 2014-115, s. 15(a); 2015-145, s. 4.2(a), (b); 2015-187, s. 2(b).)

§ 153A-358. Time limitations on validity of permits.

A permit issued pursuant to G.S. 153A-357 expires six months, or any lesser time fixed by ordinance of the county, after the date of issuance if the work authorized by the permit has not commenced. If after commencement the work is discontinued for a period of 12 months, the permit therefor immediately expires. No work authorized by a permit that has expired may thereafter be performed until a new permit has been secured. (1969, c. 1066, s. 1; 1973, c. 822, s. 1.)

§ 153A-359. Changes in work.
After a permit has been issued, no change or deviation from the terms of the application, the plans and specifications, or the permit, except if the change or deviation is clearly permissible under the State Building Code, may be made until specific written approval of the proposed change or deviation has been obtained from the inspection department. (1969, c. 1066, s. 1; 1973, c. 822, s. 1.)

§ 153A-360. Inspections of work in progress.
Subject to the limitation imposed by G.S. 153A-352(b), as the work pursuant to a permit progresses, local inspectors shall make as many inspections of the work as may be necessary to satisfy them that it is being done according to the provisions of the applicable State and local laws and local ordinances and regulations and of the terms of the permit. In exercising this power, each member of the inspection department has a right, upon presentation of proper credentials, to enter on any premises within the territorial jurisdiction of the department at any reasonable hour for the purposes of inspection or other enforcement action. If a permit has been obtained by an owner exempt from licensure under G.S. 87-1(b)(2), no inspection shall be conducted without the owner being personally present, unless the plans for the building were drawn and sealed by an architect licensed pursuant to Chapter 83A of the General Statutes. (1969, c. 1066, s. 1; 1973, c. 822, s. 1; 2011-376, s. 3; 2015-145, s. 1(a).)

§ 153A-361. Stop orders.
Whenever a building or part thereof is being demolished, constructed, reconstructed, altered, or repaired in a hazardous manner, or in substantial violation of a State or local building law or local building ordinance or regulation, or in a manner that endangers life or property, the appropriate inspector may order the specific part of the work that is in violation or that presents such a hazard to be immediately stopped. The stop order shall be in writing and directed to the person doing the work, and shall state the specific work to be stopped, the specific reasons for the stoppage, and the conditions under which the work may be resumed. The owner or builder may appeal from a stop order involving alleged violation of the State Building Code or any approved local modification thereof to the North Carolina Commissioner of Insurance or his designee within five days after the day the order is issued. The owner or builder shall give to the Commissioner of Insurance or his designee written notice of appeal, with a copy to the local inspector. The Commissioner or his designee shall promptly conduct an investigation and the appellant and the inspector shall be permitted to submit relevant evidence. The Commissioner or his designee shall as expeditiously as possible provide a written statement of the decision setting forth the facts found, the decision reached, and the reasons for the decision. Pending the ruling by the Commissioner of Insurance or his designee on an appeal, no further work may take place in violation of a stop order. In the event of dissatisfaction with the decision, the person affected shall have the options of:

1) Appealing to the Building Code Council, or
2) Appealing to the Superior Court as provided in G.S.143-141.

Violation of a stop order constitutes a Class 1 misdemeanor. (1969, c. 1066, s. 1; 1973, c. 822, s. 1; 1983, c. 377, s. 4; 1989, c. 681, s. 5; 1993, c. 539, s. 1066; 1994, Ex. Sess., c. 24, s. 14(c).)

§ 153A-362. Revocation of permits.
The appropriate inspector may revoke and require the return of any permit by giving written notice to the permit holder, stating the reason for the revocation. Permits shall be revoked for any substantial departure from the approved application or plans and specifications, for refusal or failure to comply with the requirements of any applicable State or local laws or local ordinances or regulations, or for false statements or misrepresentations made in securing the permit. A permit mistakenly issued in violation of an applicable State or local law or local ordinance or regulation also may be revoked. (1969, c. 1066, s. 1; 1973, c. 822, s. 1.)

§ 153A-363. Certificates of compliance.
At the conclusion of all work done under a permit, the appropriate inspector shall make a final inspection. If he finds that the completed work complies with all applicable State and local laws and local ordinances and regulations and with the terms of the permit, he shall issue a certificate of compliance. No new building or part thereof may be occupied, no addition or enlargement of an existing building may be occupied, and no existing building that has been altered or removed may be occupied until the inspection department has issued a certificate of compliance. A temporary certificate of compliance may be issued permitting occupancy for a stated period of specified portions of the building that the inspector finds may safely be occupied before completion of the entire building. Violation of this section constitutes a Class 1 misdemeanor. (1973, c. 822, s. 1; 1993, c. 539, s. 1067; 1994, Ex. Sess., c. 24, s. 14(c).)

§ 153A-364. Periodic inspections for hazardous or unlawful conditions.
(a) The inspection department may make periodic inspections, subject to the board of commissioners' directions, for unsafe, unsanitary, or otherwise hazardous and unlawful conditions in buildings or structures within its territorial jurisdiction. Except as provided in subsection (b) of this section, the inspection department may make periodic inspections only when there is reasonable cause to believe that unsafe, unsanitary, or otherwise hazardous or unlawful conditions may exist in a residential building or structure. For purposes of this section, the term "reasonable cause" means any of the following: (i) the landlord or owner has a history of more than two verified violations of the housing ordinances or codes within a 12-month period; (ii) there has been a complaint that substandard conditions exist within the building or there has been a request that the building be inspected; (iii) the inspection department has actual knowledge of an unsafe condition within the building; or (iv) violations of the local ordinances or codes are visible from the outside of the property. In conducting inspections authorized under this section, the inspection department shall not discriminate between single-family and multifamily buildings. In exercising these powers, each member of the inspection department has a right, upon presentation of proper credentials, to enter on any premises within the territorial jurisdiction of the department at any reasonable hour for the purposes of inspection or other enforcement action. Nothing in this section shall be construed to prohibit periodic inspections in accordance with State fire prevention code or as otherwise required by State law.

(b) A county may require periodic inspections as part of a targeted effort within a geographic area that has been designated by the county commissioners. The county shall not discriminate in its selection of areas or housing types to be targeted and shall (i) provide notice to all owners and residents of properties in the affected area about the periodic inspections plan and information regarding a public hearing regarding the plan; (ii) hold a public hearing regarding the plan; and (iii) establish a plan to address the ability of low-income residential property owners to comply with minimum housing code standards. A residential building or structure that is subject to periodic inspections by the North Carolina Housing Finance Agency (hereinafter "Agency") shall not be subject to periodic inspections under this subsection if the Agency has issued a finding that the building or structure is in compliance with federal standards established by the United States Department of Housing and Urban Development to assess the physical condition of residential property. The owner or manager of a residential building or structure subject to periodic inspections by the Agency shall, within 10 days of receipt, submit to the inspection department a copy of the Compliance Results Letter issued by the Agency showing that the residential building or structure is in compliance with federal housing inspection standards. If the owner or manager fails to submit a copy of the Compliance Results Letter as provided in this subsection, the residential building or structure shall be subject to periodic inspections as provided in this subsection until the Compliance Results Letter is submitted to the inspection department.
(c) In no event may a county do any of the following: (i) adopt or enforce any ordinance that would require any owner or manager of rental property to obtain any permit or permission from the county to lease or rent residential real property, except for those rental units that have more than three verified violations of housing ordinances or codes in a 12-month period or upon the property being identified within the top 10% of properties with crime or disorder problems as set forth in a local ordinance; (ii) require that an owner or manager of residential rental property enroll or participate in any governmental program as a condition of obtaining a certificate of occupancy; or (iii) except as provided in subsection (d) of this section, levy a special fee or tax on residential rental property that is not also levied against other commercial and residential properties.
(d) A county may levy a fee for residential rental property registration under subsection (c) of this section for those rental units which have been found with more than two verified violations of housing ordinances or codes within the previous 12 months or upon the property being identified within the top 10% of properties with crime or disorder problems as set forth in a local ordinance. The fee shall be an amount that covers the cost of operating a residential registration program and shall not be used to supplant revenue in other areas. Counties using registration programs that charge registration fees for all residential rental properties as of June 1, 2011, may continue levying a fee on all residential rental properties as follows:

1) For properties with 20 or more residential rental units, the fee shall be no more than fifty dollars ($50.00) per year.
2) For properties with fewer than 20 but more than three residential rental units, the fee shall be no more than twenty-five dollars ($25.00) per year.
3) For properties with three or fewer residential rental units, the fee shall be no more than fifteen dollars ($15.00) per year. (1969, c. 1066, s. 1; 1973, c. 822, s. 1; 2011-281, s. 1; 2014-103, s. 13(a).)

§ 153A-365. Defects in buildings to be corrected.
If a local inspector finds any defect in a building, or finds that the building has not been constructed in accordance with the applicable State and local laws and local ordinances and regulations, or finds that a building because of its condition is dangerous or contains fire-hazardous conditions, he shall notify the owner or occupant of the building of its defects, hazardous conditions, or failure to comply with law. The owner and the occupant shall each immediately remedy the defects, hazardous conditions, or violations of law in the property each owns. (1969, c. 1066, s. 1; 1973, c. 822, s. 1.)

§ 153A-366. Unsafe buildings condemned.
The inspector shall condemn as unsafe each building that appears to him to be especially dangerous to life because of its liability to fire, bad conditions of walls, overloaded floors, defective construction, decay, unsafe wiring or heating system, inadequate means of egress, or other causes; and he shall affix a notice of the dangerous character of the building to a conspicuous place on its exterior wall. (1969, c. 1066, s. 1; 1973, c. 822, s. 1.)

§ 153A-367. Removing notice from condemned building.
If a person removes a notice that has been affixed to a building by a local inspector and that states the dangerous character of the building, he is guilty of a Class 1 misdemeanor. (1969, c. 1066, s. 1; 1973, c. 822, s. 1; 1993, c. 539, s. 1068; 1994, Ex. Sess., c. 24, s. 14(c).)

§ 153A-368. Action in event of failure to take corrective action.
If the owner of a building that has been condemned as unsafe pursuant to G.S. 153A-366 fails to take prompt corrective action, the local inspector shall by certified or registered mail to his last known address or by personal service give him written notice:

1) That the building is in a condition that appears to constitute a fire or safety hazard or to be dangerous to life, health, or other property;
2) That a hearing will be held before the inspector at a designated place and time, not later than 10 days after the date of the notice, at which time the owner is entitled to be heard in person or by counsel and to present arguments and evidence pertaining to the matter; and
3) That following the hearing, the inspector may issue any order to repair, close, vacate, or demolish the building that appears appropriate.

If the name or whereabouts of the owner cannot after due diligence be discovered, the notice shall be considered properly and adequately served if a copy thereof is posted on the outside of the building in question at least 10 days before the day of the hearing and a notice of the hearing is published at least once not later than one week before the hearing. (1969, c. 1066, s. 1; 1973, c. 822, s. 1.)

§ 153A-369. Order to take corrective action.
If, upon a hearing held pursuant to G.S. 153A-368, the inspector finds that the building is in a condition that constitutes a fire or safety hazard or renders it dangerous to life, health, or other property, he shall issue a written order, directed to the owner of the building, requiring the owner to remedy the defective conditions by repairing, closing, vacating, or demolishing the building or taking other necessary steps, within such period, not less than 60 days, as the inspector may prescribe; provided, that where the inspector finds that there is

imminent danger to life or other property, he may order that corrective action be taken in such lesser period as may be feasible. (1969, c. 1066, s. 1; 1973, c. 822, s. 1; 1979, c. 611, s. 5.)

§ 153A-370. Appeal; finality of order not appealed.
An owner who has received an order under G.S. 153A-369 may appeal from the order to the board of commissioners by giving written notice of appeal to the inspector and to the clerk within 10 days following the day the order is issued. In the absence of an appeal, the order of the inspector is final. The board of commissioners shall hear any appeal within a reasonable time and may affirm, modify and affirm, or revoke the order. (1969, c. 1066, s. 1; 1973, c. 822, s. 1.)

§ 153A-371. Failure to comply with order.
If the owner of a building fails to comply with an order issued pursuant to G.S. 153A-369 from which no appeal has been taken, or fails to comply with an order of the board of commissioners following an appeal, he is guilty of a Class 1 misdemeanor. (1969, c. 1066, s. 1; 1973, c. 822, s. 1; 1993, c. 539, s. 1069; 1994, Ex. Sess., c. 24, s. 14(c).)

§ 153A-372. Equitable enforcement.
Whenever a violation is denominated a misdemeanor under the provisions of this Part, the county, either in addition to or in lieu of other remedies, may initiate any appropriate action or proceeding to prevent, restrain, correct, or abate the violation or to prevent the occupancy of the building involved. (1969, c. 1066, s. 1; 1973, c. 822, s. 1.)

§ 153A-372.1. Ordinance authorized as to repair, closing, and demolition of nonresidential buildings or structures; order of public officer.
The provisions of G.S. 160A-439 shall apply to counties. (2007-414, s. 2.)

§ 153A-373. Records and reports.
The inspection department shall keep complete, and accurate records in convenient form of each application received, each permit issued, each inspection and reinspection made, and each defect found, each certificate of compliance granted, and all other work and activities of the department. These records shall be kept in the manner and for the periods prescribed by the North Carolina Department of Natural and Cultural Resources. The department shall submit periodic reports to the board of commissioners and to the Commissioner of Insurance as the board or the Commissioner may require. (1969, c. 1066, s. 1; 1973, c. 822, s. 1; 1983, c. 377, s. 6; 2015-241, s. 14.30(s).)

§ 153A-374. Appeals.
Unless otherwise provided by law, any appeal from an order, decision, or determination of a member of a local inspection department pertaining to the State Building Code or any other State building law shall be taken to the Commissioner of Insurance or his designee or other official specified in G.S. 143-139, by filing a written notice with him and with the inspection department within 10 days after the day of the order, decision, or determination. Further appeals may be taken to the State Building Code Council or to the courts as provided by law. (1969, c. 1066, s. 1; 1973, c. 822, s. 1; 1989, c. 681, s. 7.)

§ 153A-375. Establishment of fire limits.
A county may by ordinance establish and define fire limits in any area within the county and not within a city. The limits may include only business and industrial areas. Within any fire limits, no frame or wooden building or addition thereto may be erected, altered, repaired, or moved (either into the fire limits or from one place to another within the limits) except upon the permit of the inspection department and approval of the Commissioner of Insurance. The board of commissioners may make additional regulations necessary for the prevention, extinguishment, or mitigation of fires within the fire limits. (1969, c. 1066, s. 1; 1973, c. 822, s. 1.)

CHAPTER 160A-PART 5
Building Inspection (Cities).

160A-411. Inspection department.
160A-411.1. Qualifications of inspectors.
160A-412. Duties and responsibilities.
160A-413. Joint inspection department; other arrangements.
160A-414. Financial support.
160A-415. Conflicts of interest.
160A-416. Failure to perform duties.
160A-417. Permits.
160A-418. Time limitations on validity of permits.
160A-419. Changes in work.
160A-420. Inspections of work in progress.
160A-421. Stop orders.
160A-422. Revocation of permits.
160A-423. Certificates of compliance.
160A-424. Periodic inspections.
160A-425. Defects in buildings to be corrected.
160A-426. Unsafe buildings condemned.
160A-427. Removing notice from condemned building.
160A-428. Action in event of failure to take corrective action.
160A-429. Order to take corrective action.
160A-430. Appeal; finality of order if not appealed.
160A-431. Failure to comply with order.
160A-432. Equitable enforcement.

160A-433. Records and reports.
160A-434. Appeals in general.
160A-435. Establishment of fire limits.
160A-436. Restrictions within primary fire limits.
160A-437. Restriction within secondary fire limits.
160A-438. Failure to establish primary fire limits.
160A-439, 160A-440. [Reserved.]

§ 160A-411. Inspection department.

Every city in the State is hereby authorized to create an inspection department, and may appoint one or more inspectors who may be given the titles of building inspector, electrical inspector, plumbing inspector, housing inspector, zoning inspector, heating and air-conditioning inspector, fire prevention inspector, or deputy or assistant inspector, or such other titles as may be generally descriptive of the duties assigned. The department may be headed by a superintendent or director of inspections. Every city shall perform the duties and responsibilities set forth in G.S. 160A-412 either by: (i) creating its own inspection department; (ii) creating a joint inspection department in cooperation with one or more other units of local government, pursuant to G.S. 160A-413 or Part 1 of Article 20 of this Chapter; (iii) contracting with another unit of local government for the provision of inspection services pursuant to Part 1 of Article 20 of this Chapter; or (iv) arranging for the county in which it is located to perform inspection services within the city's jurisdiction as authorized by G.S. 160A-413 and G.S. 160A-360. Such action shall be taken no later than the applicable date in the schedule below, according to the city's population as published in the 1970 United States Census:

Cities over 75,000 population - July 1, 1979
Cities between 50,001 and 75,000 - July 1, 1981
Cities between 25,001 and 50,000 - July 1, 1983
Cities 25,000 and under - July 1, 1985.

In the event that any city shall fail to provide inspection services by the date specified above or shall cease to provide such services at any time thereafter, the Commissioner of Insurance shall arrange for the provision of such services, either through personnel employed by his department or through an arrangement with other units of government. In either event, the Commissioner shall have and may exercise within the city's jurisdiction all powers made available to the city council with respect to building inspection under Part 5 of Article 19, and Part 1 of Article 20 of this Chapter. Whenever the Commissioner has intervened in this manner, the city may assume provision of inspection services only after giving the Commissioner two years' written notice of its intention to do so; provided, however, that the Commissioner may waive this requirement or permit assumption at an earlier date if he finds that such earlier assumption will not unduly interfere with arrangements he has made for the provision of those services. (1969, c. 1065, s. 1; 1971, c. 698, s. 1; 1977, c. 531, s. 5.)

§ 160A-411.1. Qualifications of inspectors.

On and after the applicable date set forth in the schedule in G.S. 160A-411, no city shall employ an inspector to enforce the State Building Code as a member of a city or joint inspection department who does not have one of the following types of certificates issued by the North Carolina Code Officials Qualification Board attesting to his qualifications to hold such position: (i) a probationary certificate, valid for one year only; (ii) a standard certificate; or (iii) a limited certificate which shall be valid only as an authorization for him to continue in the position held on the date specified in G.S. 143-151.13(c) and which shall become invalid if he does not successfully complete in-service training specified by the Qualification Board within the period specified in G.S. 143-151.13(c). An inspector holding one of the above certificates can be promoted to a position requiring a higher level certificate only upon issuance by the Board of a standard certificate or probationary certificate appropriate for such new position. (1977, c. 531, s. 6.)

§ 160A-412. Duties and responsibilities.

(a) The duties and responsibilities of an inspection department and of the inspectors therein shall be to enforce within their territorial jurisdiction State and local laws relating to

1) The construction of buildings and other structures;
2) The installation of such facilities as plumbing systems, electrical systems, heating systems, refrigeration systems, and air-conditioning systems;
3) The maintenance of buildings and other structures in a safe, sanitary, and healthful condition;
4) Other matters that may be specified by the city council.

(a1) The duties and responsibilities set forth in subsection (a) of this section shall include the receipt of applications for permits and the issuance or denial of permits, the making of any necessary inspections in a timely manner, the issuance or denial of certificates of compliance, the issuance of orders to correct violations, the bringing of judicial actions against actual or threatened violations, the keeping of adequate records, and any other actions that may be required in order adequately to enforce those laws. The city council shall have the authority to enact reasonable and appropriate provisions governing the enforcement of those laws.

(b) Except as provided in G.S. 160A-424, a city may not adopt a local ordinance or resolution or any other policy that requires regular, routine inspections of buildings or structures constructed in compliance with the North Carolina Residential Code for One- and Two-Family Dwellings in addition to the specific inspections required by the North Carolina Building Code without first obtaining approval from the North Carolina Building Code Council. The North Carolina Building Code Council shall review all applications for additional inspections requested by a city and shall, in a reasonable manner, approve or disapprove the additional inspections. This subsection does not limit the authority of the city to require inspections upon unforeseen or unique circumstances that require immediate action. In performing the specific inspections required by the North Carolina Building Code, the inspector shall conduct all inspections requested by the permit holder for each scheduled inspection visit. For each requested inspection, the inspector shall inform the permit holder of instances in which the work inspected is incomplete or otherwise fails to meet the requirements of the North Carolina Residential Code for One- and Two-Family Dwellings.

(c) Notwithstanding the requirements of this Article, a city shall accept and approve, without further responsibility to inspect, a design or other proposal for a component or element in the construction of buildings from a licensed architect or licensed engineer provided all of the following apply:

1) The submission is completed under valid seal of the licensed architect or licensed engineer.

2) Field inspection of the installation or completion of construction component or element of the building is performed by that licensed architect or licensed engineer.
3) That licensed architect or licensed engineer provides the city with a signed written document stating the component or element of the building so inspected is in compliance with the North Carolina State Building Code or the North Carolina Residential Code for One- and Two-Family Dwellings.

(d) Upon the acceptance and approval of a signed written document by the city as required under subsection (c) of this section, the city, its inspection department, and the inspectors shall be discharged and released from any duties and responsibilities imposed by this Article with respect to the component or element in the construction of the building for which the signed written document was submitted. (1969, c. 1065, s. 1; 1971, c. 698, s. 1; 2013-118, s. 1(b); 2015-145, ss. 8.2, 9(c).)

§ 160A-413. Joint inspection department; other arrangements.

A city council may enter into and carry out contracts with another city, county, or combination thereof under which the parties agree to create and support a joint inspection department for the enforcement of State and local laws specified in the agreement. The governing boards of the contracting parties are authorized to make any necessary appropriations for this purpose.

In lieu of a joint inspection department, a city council may designate an inspector from any other city or county to serve as a member of its inspection department with the approval of the governing body of the other city or county. A city may also contract with an individual who is not a city or county employee but who holds one of the applicable certificates as provided in G.S. 160A-411.1 or G.S. 153A-351.1 or with the employer of an individual who holds one of the applicable certificates as provided in G.S. 160A-411.1 or G.S. 153A-351.1. The inspector, if designated from another city or county under this section, shall, while exercising the duties of the position, be considered a municipal employee. The city shall have the same potential liability, if any, for inspections conducted by an individual who is not an employee of the city as it does for an individual who is an employee of the city. The company or individual with whom the city contracts shall have errors and omissions and other insurance coverage acceptable to the city.

The city council of any city may request the board of county commissioners of the county in which the city is located to direct one or more county building inspectors to exercise their powers within part or all of the city's jurisdiction, and they shall thereupon be empowered to do so until the city council officially withdraws its request in the manner provided in G.S. 160A-360(g). (1969, c. 1065, s. 1; 1971, c. 698, s. 1; 1973, c. 426, s. 64; 1993, c. 232, s. 3; 1999-372, s. 3; 2001-278, s. 2.)

§ 160A-414. Financial support.

The city council may appropriate for the support of the inspection department any funds that it deems necessary. It may provide for paying inspectors fixed salaries or it may reimburse them for their services by paying over part or all of any fees collected. It shall have power to fix reasonable fees for issuance of permits, inspections, and other services of the inspection department. All fees collected under the authority set forth in this section shall be used for support of the administration and activities of the inspection department and for no other purpose. (1969, c. 1065, s. 1; 1971, c. 698, s. 1; 2015-145, s. 7.2.)

§ 160A-415. Conflicts of interest.

No member of an inspection department shall be financially interested or employed by a business that is financially interested in the furnishing of labor, material, or appliances for the construction, alteration, or maintenance of any building within the city's jurisdiction or any part or system thereof, or in the making of plans or specifications therefor, unless he is the owner of the building. No member of an inspection department or other individual or an employee of a company contracting with a city to conduct inspections shall engage in any work that is inconsistent with his or her duties or with the interest of the city, as determined by the city. The city must find a conflict of interest if any of the following is the case:

1) If the individual, company, or employee of a company contracting to perform inspections for the city has worked for the owner, developer, contractor, or project manager of the project to be inspected within the last two years.
2) If the individual, company, or employee of a company contracting to perform inspections for the city is closely related to the owner, developer, contractor, or project manager of the project to be inspected.
3) If the individual, company, or employee of a company contracting to perform inspections for the city has a financial or business interest in the project to be inspected.

The provisions of this section do not apply to a firefighter whose primary duties are fire suppression and rescue, but who engages in some fire inspection activities as a secondary responsibility of the firefighter's employment as a firefighter, except no firefighter may inspect any work actually done, or materials or appliances supplied, by the firefighter or the firefighter's business within the preceding six years. (1969, c. 1065, s. 1; 1971, c. 698, s. 1; 1993, c. 232, s. 4; 1998-122, s. 1; 1999-372, s. 4.)

§ 160A-416. Failure to perform duties.

(a) If any member of an inspection department shall willfully fail to perform the duties required of him by law, or willfully shall improperly issue a permit, or shall give a certificate of compliance without first making the inspections required by law, or willfully shall improperly give a certificate of compliance, he shall be guilty of a Class 1 misdemeanor.

(b) A member of the inspection department shall not be in violation of this section when the city, its inspection department, or one of the inspectors accepted a signed written document of compliance with the North Carolina State Building Code or the North Carolina Residential Code for One- and Two-Family Dwellings from a licensed architect or licensed engineer in accordance with G.S. 160A-412(c). (1969, c. 1065, s. 1; 1971, c. 698, s. 1; 1993, c. 539, s. 1089; 1994, Ex. Sess., c. 24, s. 14(c); 2015-145, s. 9(d).)

§ 160A-417. Permits.

(a) Except as provided in subsection (a2) of this section, no person shall commence or proceed with any of the following without first securing from the inspection department with jurisdiction over the site of the work any and all permits required by the State Building Code and any other State or local laws applicable to the work:

1) The construction, reconstruction, alteration, repair, movement to another site, removal, or demolition of any building or structure.
2) The installation, extension, or general repair of any plumbing system except that in any one- or two-family dwelling unit a permit shall not be required for the connection of a water heater that is being replaced, provided that the work is performed by a person

licensed under G.S. 87-21, who personally examines the work at completion and ensures that a leak test has been performed on the gas piping, and provided the energy use rate or thermal input is not greater than that of the water heater which is being replaced, there is no change in fuel, energy source, location, capacity, or routing or sizing of venting and piping, and the replacement is installed in accordance with the current edition of the State Building Code.

3) The installation, extension, alteration, or general repair of any heating or cooling equipment system.
4) The installation, extension, alteration, or general repair of any electrical wiring, devices, appliances, or equipment except that in any one- or two-family dwelling unit a permit shall not be required for repair or replacement of electrical lighting fixtures or devices, such as receptacles and lighting switches, or for the connection of an existing branch circuit to an electric water heater that is being replaced, provided that all of the following requirements are met:

a. With respect to electric water heaters, the replacement water heater is placed in the same location and is of the same or less capacity and electrical rating as the original.
b. With respect to electrical lighting fixtures and devices, the replacement is with a fixture or device having the same voltage and the same or less amperage.
c. The work is performed by a person licensed under G.S. 87-43.
d. The repair or replacement installation meets the current edition of the State Building Code, including the State Electrical Code.

However, a permit is not required for the installation, maintenance, or replacement of any load control device or equipment by an electric power supplier, as defined in G.S. 62-133.8, or an electrical contractor contracted by the electric power supplier, so long as the work is subject to supervision by an electrical contractor licensed under Article 4 of Chapter 87 of the General Statutes. The electric power supplier shall provide such installation, maintenance, or replacement in accordance with (i) an activity or program ordered, authorized, or approved by the North Carolina Utilities Commission pursuant to G.S. 62-133.8 or G.S. 62-133.9 or (ii) a similar program undertaken by a municipal electric service provider, whether the installation, modification, or replacement is made before or after the point of delivery of electric service to the customer. The exemption under this subdivision applies to all existing installations.

(a1) A permit shall be in writing and shall contain a provision that the work done shall comply with the State Building Code and all other applicable State and local laws. Nothing in this section shall require a city to review and approve residential building plans submitted to the city pursuant to Section R-110 of Volume VII of the North Carolina State Building Code; provided that the city may review and approve such residential building plans as it deems necessary. No permits shall be issued unless the plans and specifications are identified by the name and address of the author thereof, and if the General Statutes of North Carolina require that plans for certain types of work be prepared only by a licensed architect or licensed engineer, no permit shall be issued unless the plans and specifications bear the North Carolina seal of a licensed architect or of a licensed engineer. When any provision of the General Statutes of North Carolina or of any ordinance requires that work be done by a licensed specialty contractor of any kind, no permit for the work shall be issued unless the work is to be performed by such a duly licensed contractor.

(a2) No permit issued under Articles 9 or 9C of G.S. Chapter 143 shall be required for any construction, installation, repair, replacement, or alteration performed in accordance with the current edition of the North Carolina State Building Code and costing fifteen thousand dollars ($15,000) or less in any single-family residence or farm building unless the work involves any of the following:

1. The addition, repair or replacement of load bearing structures. However, no permit is required for replacements of windows, doors, exterior siding, or the pickets, railings, stair treads, and decking of porches and exterior decks.
2. The addition or change in the design of plumbing. However, no permit is required for replacements otherwise meeting the requirements of this subsection that do not change size or capacity.
3. The addition, replacement or change in the design of heating, air conditioning, or electrical wiring, devices, appliances, or equipment, other than like-kind replacement of electrical devices and lighting fixtures.
4. The use of materials not permitted by the North Carolina Residential Code for One- and Two-Family Dwellings.
5. The addition (excluding replacement) of roofing.

(g) Violation of this section constitutes a Class 1 misdemeanor.

(a3) A city shall not require more than one permit for the complete installation or replacement of any natural gas, propane gas, or electrical appliance on an existing structure when the installation or replacement is performed by a person licensed under G.S. 87-21 or G.S. 87-43. The cost of the permit for such work shall not exceed the cost of any one individual trade permit issued by that city, nor shall the city increase the costs of any fees to offset the loss of revenue caused by this provision.

(b) No permit shall be issued pursuant to subsection (a) for any land-disturbing activity, as defined in G.S. 113A-52(6), for any activity covered by G.S. 113A-57, unless an erosion and sedimentation control plan has been approved by the Sedimentation Pollution Control Commission pursuant to G.S. 113A-54(d)(4) or by a local government pursuant to G.S. 113A-61 for the site of the activity or a tract of land including the site of the activity.

(c) Repealed by Session Laws 2014-115, s. 15(b), effective August 11, 2014.

(d) No permit shall be issued pursuant to subdivision (1) of subsection (a) of this section where the cost of the work is thirty thousand dollars ($30,000) or more, other than for improvements to an existing single-family residential dwelling unit as defined in G.S. 87-15.5(7) that the owner occupies as a residence, or for the addition of an accessory building or accessory structure as defined in the North Carolina Uniform Residential Building Code, the use of which is incidental to that residential dwelling unit, unless the name, physical and mailing address, telephone number, facsimile number, and electronic mail address of the lien agent designated by the owner pursuant to G.S. 44A-11.1(a) is conspicuously set forth in the permit or in an attachment thereto. The building permit may contain the lien agent's electronic mail address. The lien agent information for each permit issued pursuant to this subsection shall be maintained by the inspection department in the same manner and in the same location in which it maintains its record of building permits issued.

(e) No city may withhold issuing a building permit or certificate of occupancy that otherwise would be eligible to be issued under this section to compel, with respect to another property or parcel, completion of work for a separate permit or compliance with land use regulations under this Article unless otherwise authorized by law or unless the city reasonably determines the existence of a public safety issue directly related to the issuance of a building permit or certificate of occupancy. (1905, c. 506, s. 26; Rev., s. 2986; 1915, c. 192, s. 3; C.S., s. 2748; 1957, c. 817; 1969, c. 1065, s. 1; 1971, c. 698, s. 1; 1973, c. 426, s. 65; 1981, c. 677, s. 1; 1983, c. 377, s. 3; c. 614, s. 1; 1987 (Reg. Sess., 1988), c. 1000, s. 2; 1993, c. 539, s. 1090; 1994, Ex. Sess., c. 24, s. 14(c); 1993 (Reg. Sess., 1994), c. 741, s. 2; 2002-165, s.

2.20; 2008-198, s. 8(d); 2009-532, s. 3; 2012-158, s. 5; 2013-58, s. 3; 2013-117, s. 5; 2013-160, s. 2; 2014-115, s. 15(b); 2015-145, s. 4.3(a), (b); 2015-187, s. 2(a), 2016-113, s.770.)

§ 160A-418. Time limitations on validity of permits.
A permit issued pursuant to G.S. 160A-417 shall expire by limitation six months, or any lesser time fixed by ordinance of the city council, after the date of issuance if the work authorized by the permit has not been commenced. If after commencement the work is discontinued for a period of 12 months, the permit therefor shall immediately expire. No work authorized by any permit that has expired shall thereafter be performed until a new permit has been secured. (1969, c. 1065, s. 1; 1971, c. 698, s. 1.)

§ 160A-419. Changes in work.
After a permit has been issued, no changes or deviations from the terms of the application, plans and specifications, or the permit, except where changes or deviations are clearly permissible under the State Building Code, shall be made until specific written approval of proposed changes or deviations has been obtained from the inspection department. (1969, c. 1065, s. 1; 1971, c. 698, s. 1.)

§ 160A-420. Inspections of work in progress.
Subject to the limitation imposed by G.S. 160A-412(b), as the work pursuant to a permit progresses, local inspectors shall make as many inspections thereof as may be necessary to satisfy them that the work is being done according to the provisions of any applicable State and local laws and of the terms of the permit. In exercising this power, members of the inspection department shall have a right to enter on any premises within the jurisdiction of the department at all reasonable hours for the purposes of inspection or other enforcement action, upon presentation of proper credentials. If a permit has been obtained by an owner exempt from licensure under G.S. 87-1(b)(2), no inspection shall be conducted without the owner being personally present, unless the plans for the building were drawn and sealed by an architect licensed pursuant to Chapter 83A of the General Statutes. (1969, c. 1065, s. 1; 1971, c. 698, s. 1; 2011-376, s. 4; 2015-145, s. 1(b).)

§ 160A-421. Stop orders.
(a) Whenever any building or structure or part thereof is being demolished, constructed, reconstructed, altered, or repaired in a hazardous manner, or in substantial violation of any State or local building law, or in a manner that endangers life or property, the appropriate inspector may order the specific part of the work that is in violation or presents such a hazard to be immediately stopped. The stop order shall be in writing, directed to the person doing the work, and shall state the specific work to be stopped, the specific reasons therefor, and the conditions under which the work may be resumed.
(b) The owner or builder may appeal from a stop order involving alleged violation of the State Building Code or any approved local modification thereof to the North Carolina Commissioner of Insurance or his designee within a period of five days after the order is issued. Notice of appeal shall be given in writing to the Commissioner of Insurance or his designee, with a copy to the local inspector. The Commissioner of Insurance or his designee shall promptly conduct an investigation and the appellant and the inspector shall be permitted to submit relevant evidence. The Commissioner of Insurance or his designee shall as expeditiously as possible provide a written statement of the decision setting forth the facts found, the decision reached, and the reasons for the decision. Pending the ruling by the Commissioner of Insurance or his designee on an appeal no further work shall take place in violation of a stop order. In the event of dissatisfaction with the decision, the person affected shall have the options of:
1) Appealing to the Building Code Council, or
2) Appealing to the Superior Court as provided in G.S. 143-141.

(c) The owner or builder may appeal from a stop order involving alleged violation of a local zoning ordinance by giving notice of appeal in writing to the board of adjustment. The appeal shall be heard and decided within the period established by the ordinance, or if none is specified, within a reasonable time. No further work shall take place in violation of a stop order pending a ruling.
(d) Violation of a stop order shall constitute a Class 1 misdemeanor. (1969, c. 1065, s. 1; 1971, c. 698, s. 1; 1983, c. 377, s. 5; 1989, c. 681, s. 6; 1991, c. 512, s. 3; 1993, c. 539, s. 1091; 1994, Ex. Sess., c. 24, s. 14(c).)

§ 160A-422. Revocation of permits.
The appropriate inspector may revoke and require the return of any permit by notifying the permit holder in writing stating the reason for the revocation. Permits shall be revoked for any substantial departure from the approved application, plans, or specifications; for refusal or failure to comply with the requirements of any applicable State or local laws; or for false statements or misrepresentations made in securing the permit. Any permit mistakenly issued in violation of an applicable State or local law may also be revoked. (1969, c. 1065, s. 1; 1971, c. 698, s. 1.)

§ 160A-423. Certificates of compliance.
At the conclusion of all work done under a permit, the appropriate inspector shall make a final inspection, and if he finds that the completed work complies with all applicable State and local laws and with the terms of the permit, he shall issue a certificate of compliance. No new building or part thereof may be occupied, and no addition or enlargement of an existing building may be occupied, and no existing building that has been altered or moved may be occupied, until the inspection department has issued a certificate of compliance. A temporary certificate of compliance may be issued permitting occupancy for a stated period of specified portions of the building that the inspector finds may safely be occupied prior to final completion of the entire building. Violation of this section shall constitute a Class 1 misdemeanor. (1969, c. 1065, s. 1; 1971, c. 698, s. 1; 1973, c. 426, s. 66; 1993, c. 539, s. 1092; 1994, Ex. Sess., c. 24, s. 14(c).)

§ 160A-424. Periodic inspections.
(a) The inspection department may make periodic inspections, subject to the council's directions, for unsafe, unsanitary, or otherwise hazardous and unlawful conditions in buildings or structures within its territorial jurisdiction. Except as provided in subsection (b) of this section, the inspection department may make periodic inspections only when there is reasonable cause to believe that unsafe, unsanitary, or otherwise hazardous or unlawful conditions may exist in a residential building or structure. For purposes of this section, the term "reasonable cause" means any of the following: (i) the landlord or owner has a history of more than two verified violations of the housing ordinances or codes within a 12-month period; (ii) there has been a complaint that substandard conditions exist within the building or there has been a request that the building be inspected; (iii) the inspection department has actual knowledge of an unsafe condition within the building; or (iv) violations of the local ordinances or codes are visible from the outside of the property. In conducting inspections authorized under this section, the inspection department shall not discriminate between single-family and multifamily buildings. In exercising this power, members of the department shall have a right to enter on any premises within the jurisdiction of the department at all reasonable hours for the purposes of inspection or other enforcement action, upon presentation of proper credentials. Nothing in this section shall be construed to prohibit periodic inspections in accordance with State fire prevention code or as otherwise required by State law.
(b) A city may require periodic inspections as part of a targeted effort within a geographic area that has been designated by the city council. The municipality shall not discriminate in its selection of areas or housing types to be targeted and shall (i) provide notice to all owners and residents of properties in the affected area about the periodic inspections plan and information regarding a public hearing regarding the plan; (ii) hold a public hearing regarding the plan; and (iii) establish a plan to address the ability of low-income residential property owners to comply with minimum housing code standards. A residential building or structure that is subject to periodic inspections by the North Carolina Housing Finance Agency (hereinafter "Agency") shall not be subject to periodic inspections under this subsection if the Agency has issued a finding that the building or structure is in compliance with federal standards established by the United States Department of Housing and Urban Development to assess the physical condition of residential property. The owner or manager of a residential building or structure subject to periodic inspections by the Agency shall, within 10 days of receipt, submit to the inspection department a copy of the Compliance

Results Letter issued by the Agency showing that the residential building or structure is in compliance with federal housing inspection standards. If the owner or manager fails to submit a copy of the Compliance Results Letter as provided in this subsection, the residential building or structure shall be subject to periodic inspections as provided in this subsection until the Compliance Results Letter is submitted to the inspection department.
(c) In no event may a city do any of the following: (i) adopt or enforce any ordinance that would require any owner or manager of rental property to obtain any permit or permission from the city to lease or rent residential real property, except for those properties that have more than three verified violations in a 12-month period or upon the property being identified within the top 10% of properties with crime or disorder problems as set forth in a local ordinance; (ii) require that an owner or manager of residential rental property enroll or participate in any governmental program as a condition of obtaining a certificate of occupancy; or (iii) except as provided in subsection (d) of this section, levy a special fee or tax on residential rental property that is not also levied against other commercial and residential properties.
(d) A city may levy a fee for residential rental property registration under subsection (c) of this section for those rental units which have been found with more than two verified violations of local ordinances within the previous 12 months or upon the property being identified within the top 10% of properties with crime or disorder problems as set forth in a local ordinance. The fee shall be an amount that covers the cost of operating a residential registration program and shall not be used to supplant revenue in other areas. Cities using registration programs that charge registration fees for all residential rental properties as of June 1, 2011, may continue levying a fee on all residential rental properties as follows:

1) For properties with 20 or more residential rental units, the fee shall be no more than fifty dollars ($50.00) per year.
2) For properties with fewer than 20 but more than three residential rental units, the fee shall be no more than twenty-five dollars ($25.00) per year.
3) For properties with three or fewer residential rental units, the fee shall be no more than fifteen dollars ($15.00) per year. (1969, c. 1065, s. 1; 1971, c. 698, s. 1; 2011-281, s. 2; 2014-103, s. 13(b).)

§ 160A-425. Defects in buildings to be corrected.
When a local inspector finds any defects in a building, or finds that the building has not been constructed in accordance with the applicable State and local laws, or that a building because of its condition is dangerous or contains fire hazardous conditions, it shall be his duty to notify the owner or occupant of the building of its defects, hazardous conditions, or failure to comply with law. The owner or occupant shall each immediately remedy the defects, hazardous conditions, or violations of law in the property he owns. (1905, c. 506, s. 28; Rev., s. 3009; 1915, c. 192, s. 14; C.S., s. 2771; 1969, c. 1065, s. 1; 1971, c. 698, s. 1; 1973, c. 426, s. 67.)

§ 160A-425.1: Repealed by Session Laws 2009-263, s. 1, effective October 1, 2009.

§ 160A-426. Unsafe buildings condemned in localities.
(a) Residential Building and Nonresidential Building or Structure. - Every building that shall appear to the inspector to be especially dangerous to life because of its liability to fire or because of bad condition of walls, overloaded floors, defective construction, decay, unsafe wiring or heating system, inadequate means of egress, or other causes, shall be held to be unsafe, and the inspector shall affix a notice of the dangerous character of the structure to a conspicuous place on the exterior wall of the building.
(b) Nonresidential Building or Structure. - In addition to the authority granted in subsection (a) of this section, an inspector may declare a nonresidential building or structure within a community development target area to be unsafe if it meets both of the following conditions:

1) It appears to the inspector to be vacant or abandoned.
2) It appears to the inspector to be in such dilapidated condition as to cause or contribute to blight, disease, vagrancy, fire or safety hazard, to be a danger to children, or to tend to attract persons intent on criminal activities or other activities that would constitute a public nuisance.

(c) If an inspector declares a nonresidential building or structure to be unsafe under subsection (b) of this section, the inspector must affix a notice of the unsafe character of the structure to a conspicuous place on the exterior wall of the building. For the purposes of this section, the term "community development target area" means an area that has characteristics of an urban progress zone under G.S. 143B-437.09, a "nonresidential redevelopment area" under G.S. 160A-503(10), or an area with similar characteristics designated by the city council as being in special need of revitalization for the benefit and welfare of its citizens.
(d) A municipality may expand subsections (b) and (c) of this section to apply to residential buildings by adopting an ordinance. Before adopting such an ordinance, a municipality shall hold a public hearing and shall provide notice of the hearing at least 10 days in advance of the hearing. (1905, c. 50-6, s. 15; Rev., s. 3010; 1915, c. 192, s. 15; C.S., s. 2773; 1929, c. 199, s. 1; 1969, c. 1065, s. 1; 1971, c. 698, s. 1; 2000-164, s. 1; 2001-386, s. 1; 2006-252, s. 2.19; 2009-263, s. 2.)

§ 160A-427. Removing notice from condemned building.
If any person shall remove any notice that has been affixed to any building or structure by a local inspector of any municipality and that states the dangerous character of the building or structure, he shall be guilty of a Class 1 misdemeanor. (1905, c. 506, s. 15; Rev., s. 3799; C.S., s. 2775; 1969, c. 1065, s. 1; 1971, c. 698, s. 1; 1993, c. 539, s. 1093; 1994, Ex. Sess., c. 24, s. 14(c).)

§ 160A-428. Action in event of failure to take corrective action.
If the owner of a building or structure that has been condemned as unsafe pursuant to G.S. 160A-426 shall fail to take prompt corrective action, the local inspector shall give him written notice, by certified or registered mail to his last known address or by personal service:

1) That the building or structure is in a condition that appears to meet one or more of the following conditions:
   a. Constitutes a fire or safety hazard.
   b. Is dangerous to life, health, or other property.
   c. Is likely to cause or contribute to blight, disease, vagrancy, or danger to children.
   d. Has a tendency to attract persons intent on criminal activities or other activities which would constitute a public nuisance.
2) That a hearing will be held before the inspector at a designated place and time, not later than 10 days after the date of the notice, at which time the owner shall be entitled to be heard in person or by counsel and to present arguments and evidence pertaining to the matter; and

3) That following the hearing, the inspector may issue such order to repair, close, vacate, or demolish the building or structure as appears appropriate.

If the name or whereabouts of the owner cannot after due diligence be discovered, the notice shall be considered properly and adequately served if a copy thereof is posted on the outside of the building or structure in question at least 10 days prior to the hearing and a notice of the hearing is published in a newspaper having general circulation in the city at least once not later than one week prior to the hearing. (1969, c. 1065, s. 1; 1971, c. 698, s. 1; 2000-164, s. 2; 2009-263, s. 4.)

§ 160A-429. Order to take corrective action.

If, upon a hearing held pursuant to the notice prescribed in G.S. 160A-428, the inspector shall find that the building or structure is in a condition that constitutes a fire or safety hazard or renders it dangerous to life, health, or other property, he shall make an order in writing, directed to the owner of such building or structure, requiring the owner to remedy the defective conditions by repairing, closing, vacating, or demolishing the building or structure or taking other necessary steps, within such period, not less than 60 days, as the inspector may prescribe; provided, that where the inspector finds that there is imminent danger to life or other property, he may order that corrective action be taken in such lesser period as may be feasible. (1969, c. 1065, s. 1; 1971, c. 698, s. 1; 1973, c. 426, s. 68; 1977, c. 912, s. 13.)

§ 160A-430. Appeal; finality of order if not appealed.

Any owner who has received an order under G.S. 160A-429 may appeal from the order to the city council by giving notice of appeal in writing to the inspector and to the city clerk within 10 days following issuance of the order. In the absence of an appeal, the order of the inspector shall be final. The city council shall hear and render a decision in an appeal within a reasonable time. The city council may affirm, modify and affirm, or revoke the order. (1969, c. 1065, s. 1; 1971, c. 698, s. 1; 1973, c. 426, s. 69; 2000-164, s. 4.)

§ 160A-431. Failure to comply with order.

If the owner of a building or structure fails to comply with an order issued pursuant to G.S. 160A-429 from which no appeal has been taken, or fails to comply with an order of the city council following an appeal, he shall be guilty of a Class 1 misdemeanor. (1905, c. 506, s. 15; Rev., s. 3802; 1915, c. 192, s. 19; C.S., s. 2774; 1929, c. 199, s. 2; 1969, c. 1065, s. 1; 1971, c. 698, s. 1; 1993, c. 539, s. 1094; 1994, Ex. Sess., c. 24, s. 14(c).)

§ 160A-432. Enforcement.

(a) [Action Authorized.] - Whenever any violation is denominated a misdemeanor under the provisions of this Part, the city, either in addition to or in lieu of other remedies, may initiate any appropriate action or proceedings to prevent, restrain, correct, or abate the violation or to prevent the occupancy of the building or structure involved.

(a1) Repealed by Session Laws 2009-263, s. 1, effective October 1, 2009.

(b) Removal of Building. - In the case of a building or structure declared unsafe under G.S. 160A-426 or an ordinance adopted pursuant to G.S. 160A-426, a city may, in lieu of taking action under subsection (a), cause the building or structure to be removed or demolished. The amounts incurred by the city in connection with the removal or demolition shall be a lien against the real property upon which the cost was incurred. The lien shall be filed, have the same priority, and be collected in the same manner as liens for special assessments provided in Article 10 of this Chapter. If the building or structure is removed or demolished by the city, the city shall sell the usable materials of the building and any personal property, fixtures, or appurtenances found in or attached to the building. The city shall credit the proceeds of the sale against the cost of the removal or demolition. Any balance remaining from the sale shall be deposited with the clerk of superior court of the county where the property is located and shall be disbursed by the court to the person found to be entitled thereto by final order or decree of the court.

(b1) Additional Lien. - The amounts incurred by the city in connection with the removal or demolition shall also be a lien against any other real property owned by the owner of the building or structure and located within the city limits or within one mile of the city limits, except for the owner's primary residence. The provisions of subsection (b) of this section apply to this additional lien, except that this additional lien is inferior to all prior liens and shall be collected as a money judgment.

(c) [Nonexclusive Remedy.] - Nothing in this section shall be construed to impair or limit the power of the city to define and declare nuisances and to cause their removal or abatement by summary proceedings, or otherwise. (1969, c. 1065, s. 1; 1971, c. 698, s. 1; 2000-164, s. 3; 2001-386, s. 2; 2001-448, s. 2; 2002-118, s. 2; 2003-23, s. 1; 2003-42, s. 1; 2004-6, s. 1; 2007-216, s. 2; 2008-59, s. 2; 2009-9, s. 2; 2009-263, ss. 1, 3.)

§ 160A-433. Records and reports.

The inspection department shall keep complete and accurate records in convenient form of all applications received, permits issued, inspections and reinspections made, defects found, certificates of compliance granted, and all other work and activities of the department. These records shall be kept in the manner and for the periods prescribed by the North Carolina Department of Natural and Cultural Resources. Periodic reports shall be submitted to the city council and to the Commissioner of Insurance as they shall by ordinance, rule, or regulation require. (1905, c. 506, ss. 30, 31; Rev., ss. 3004, 3005; 1915, c. 192, s. 12; C.S., ss. 2766, 2767; 1969, c. 1065, s. 1; 1971, c. 698, s. 1; 1983, c. 377, s. 7; 2015-241, s. 14.30(s).)

§ 160A-434. Appeals in general.

Unless otherwise provided by law, appeals from any order, decision, or determination by a member of a local inspection department pertaining to the State Building Code or other State building laws shall be taken to the Commissioner of Insurance or his designee or other official specified in G.S. 143-139, by filing a written notice with him and with the inspection department within a period of 10 days after the order, decision, or determination. Further appeals may be taken to the State Building Code Council or to the courts as provided by law. (1969, c. 1065, s. 1; 1971, c. 698, s. 1; 1989, c. 681, s. 7A.)

§ 160A-435. Establishment of fire limits.

The city council of every incorporated city shall pass one or more ordinances establishing and defining fire limits, which shall include the principal business portions of the city and which shall be known as primary fire limits. In addition, the council may, in its discretion, establish

and define one or more separate areas within the city as secondary fire limits. (1905, c. 506, s. 7; Rev., s. 2985; 1917, c. 136, subch. 8, s. 2; C.S., ss. 2746, 2802; 1961, c. 240; 1969, c. 1065, s. 1; 1971, c. 698, s. 1.)

§ 160A-436. Restrictions within primary fire limits.
Within the primary fire limits of any city, as established and defined by ordinance, no frame or wooden building or structure or addition thereto shall hereafter be erected, altered, repaired, or moved (either into the limits or from one place to another within the limits), except upon the permit of the local inspection department approved by the city council and by the Commissioner of Insurance or his designee. The city council may make additional regulations for the prevention, extinguishment, or mitigation of fires within the primary fire limits. (1905, c. 506, s. 8; Rev., s. 2988; 1915, c. 192, s. 5; C.S., s. 2750; 1969, c. 1065, s. 1; 1971, c. 698, s. 1; 1989, c. 681, s. 8.)

§ 160A-437. Restriction within secondary fire limits.
Within any secondary fire limits of any city or town, as established and defined by ordinance, no frame or wooden building or structure or addition thereto shall be erected, altered, repaired, or moved except in accordance with any rules and regulations established by ordinance of the areas. (1905, c. 506, s. 8; Rev., s. 2988; 1915, c. 192, s. 5; C.S., s. 2750; 1969, c. 1065, s. 1; 1971, c. 698, s. 1.)

§ 160A-438. Failure to establish primary fire limits.
If the council of any city shall fail or refuse to establish and define the primary fire limits of the city as required by law, after having such failure or refusal called to their attention in writing by the State Commissioner of Insurance, the Commissioner shall have the power to establish the limits upon making a determination that they are necessary and in the public interest. (1905, c. 506, s. 7; Rev., s. 3608; C.S., s. 2747; 1969, c. 1065, s. 1; 1971, c. 698, s. 1.)

§ 160A-439. Ordinance authorized as to repair, closing, and demolition of nonresidential buildings or structures; order of public officer.
(a) Authority. - The governing body of the city may adopt and enforce ordinances relating to nonresidential buildings or structures that fail to meet minimum standards of maintenance, sanitation, and safety established by the governing body. The minimum standards shall address only conditions that are dangerous and injurious to public health, safety, and welfare and identify circumstances under which a public necessity exists for the repair, closing, or demolition of such buildings or structures. The ordinance shall provide for designation or appointment of a public officer to exercise the powers prescribed by the ordinance, in accordance with the procedures specified in this section. Such ordinance shall only be applicable within the corporate limits of the city.
(b) Investigation. - Whenever it appears to the public officer that any nonresidential building or structure has not been properly maintained so that the safety or health of its occupants or members of the general public are jeopardized for failure of the property to meet the minimum standards established by the governing body, the public officer shall undertake a preliminary investigation. If entry upon the premises for purposes of investigation is necessary, such entry shall be made pursuant to a duly issued administrative search warrant in accordance with G.S. 15-27.2 or with permission of the owner, the owner's agent, a tenant, or other person legally in possession of the premises.
(c) Complaint and Hearing. - If the preliminary investigation discloses evidence of a violation of the minimum standards, the public officer shall issue and cause to be served upon the owner of and parties in interest in the nonresidential building or structure a complaint. The complaint shall state the charges and contain a notice that a hearing will be held before the public officer (or his or her designated agent) at a place within the county scheduled not less than 10 days nor more than 30 days after the serving of the complaint; that the owner and parties in interest shall be given the right to answer the complaint and to appear in person, or otherwise, and give testimony at the place and time fixed in the complaint; and that the rules of evidence prevailing in courts of law or equity shall not be controlling in hearings before the public officer.
(d) Order. - If, after notice and hearing, the public officer determines that the nonresidential building or structure has not been properly maintained so that the safety or health of its occupants or members of the general public is jeopardized for failure of the property to meet the minimum standards established by the governing body, the public officer shall state in writing findings of fact in support of that determination and shall issue and cause to be served upon the owner thereof an order. The order may require the owner to take remedial action, within a reasonable time specified, subject to the procedures and limitations herein.
(e) Limitations on Orders. -
1) An order may require the owner to repair, alter, or improve the nonresidential building or structure in order to bring it into compliance with the minimum standards established by the governing body or to vacate and close the nonresidential building or structure for any use.
2) An order may require the owner to remove or demolish the nonresidential building or structure if the cost of repair, alteration, or improvement of the building or structure would exceed fifty percent (50%) of its then current value. Notwithstanding any other provision of law, if the nonresidential building or structure is designated as a local historic landmark, listed in the National Register of Historic Places, or located in a locally designated historic district or in a historic district listed in the National Register of Historic Places and the governing body determines, after a public hearing as provided by ordinance, that the nonresidential building or structure is of individual significance or contributes to maintaining the character of the district, and the nonresidential building or structure has not been condemned as unsafe, the order may require that the nonresidential building or structure be vacated and closed until it is brought into compliance with the minimum standards established by the governing body.
3) An order may not require repairs, alterations, or improvements to be made to vacant manufacturing facilities or vacant industrial warehouse facilities to preserve the original use. The order may require such building or structure to be vacated and closed, but repairs may be required only when necessary to maintain structural integrity or to abate a health or safety hazard that cannot be remedied by ordering the building or structure closed for any use.

(f) Action by Governing Body Upon Failure to Comply With Order. -
1) If the owner fails to comply with an order to repair, alter, or improve or to vacate and close the nonresidential building or structure, the governing body may adopt an ordinance ordering the public officer to proceed to effectuate the purpose of this section with respect to the particular property or properties that the public officer found to be jeopardizing the health or safety of its occupants or members of the general public. The property or properties shall be described in the ordinance. The ordinance shall be recorded in the office of the register of deeds and shall be indexed in the name of the property owner or owners in the grantor index. Following adoption of an ordinance, the public officer may cause the building or structure to be repaired, altered, or improved or

to be vacated and closed. The public officer may cause to be posted on the main entrance of any nonresidential building or structure so closed a placard with the following words: "This building is unfit for any use; the use or occupation of this building for any purpose is prohibited and unlawful." Any person who occupies or knowingly allows the occupancy of a building or structure so posted shall be guilty of a Class 3 misdemeanor.

2) If the owner fails to comply with an order to remove or demolish the nonresidential building or structure, the governing body may adopt an ordinance ordering the public officer to proceed to effectuate the purpose of this section with respect to the particular property or properties that the public officer found to be jeopardizing the health or safety of its occupants or members of the general public. No ordinance shall be adopted to require demolition of a nonresidential building or structure until the owner has first been given a reasonable opportunity to bring it into conformity with the minimum standards established by the governing body. The property or properties shall be described in the ordinance. The ordinance shall be recorded in the office of the register of deeds and shall be indexed in the name of the property owner or owners in the grantor index. Following adoption of an ordinance, the public officer may cause the building or structure to be removed or demolished.

(g) Action by Governing Body Upon Abandonment of Intent to Repair. - If the governing body has adopted an ordinance or the public officer has issued an order requiring the building or structure to be repaired or vacated and closed and the building or structure has been vacated and closed for a period of two years pursuant to the ordinance or order, the governing body may make findings that the owner has abandoned the intent and purpose to repair, alter, or improve the building or structure and that the continuation of the building or structure in its vacated and closed status would be inimical to the health, safety, and welfare of the municipality in that it would continue to deteriorate, would create a fire or safety hazard, would be a threat to children and vagrants, would attract persons intent on criminal activities, or would cause or contribute to blight and the deterioration of property values in the area. Upon such findings, the governing body may, after the expiration of the two-year period, enact an ordinance and serve such ordinance on the owner, setting forth the following:

1) If the cost to repair the nonresidential building or structure to bring it into compliance with the minimum standards is less than or equal to fifty percent (50%) of its then current value, the ordinance shall require that the owner either repair or demolish and remove the building or structure within 90 days; or
2) If the cost to repair the nonresidential building or structure to bring it into compliance with the minimum standards exceeds fifty percent (50%) of its then current value, the ordinance shall require the owner to demolish and remove the building or structure within 90 days.

In the case of vacant manufacturing facilities or vacant industrial warehouse facilities, the building or structure must have been vacated and closed pursuant to an order or ordinance for a period of five years before the governing body may take action under this subsection. The ordinance shall be recorded in the office of the register of deeds in the county wherein the property or properties are located and shall be indexed in the name of the property owner in the grantor index. If the owner fails to comply with the ordinance, the public officer shall effectuate the purpose of the ordinance.

(h) Service of Complaints and Orders. - Complaints or orders issued by a public officer pursuant to an ordinance adopted under this section shall be served upon persons either personally or by registered or certified mail so long as the means used are reasonably designed to achieve actual notice. When service is made by registered or certified mail, a copy of the complaint or order may also be sent by regular mail. Service shall be deemed sufficient if the registered or certified mail is refused, but the regular mail is not returned by the post office within 10 days after the mailing. If regular mail is used, a notice of the pending proceedings shall be posted in a conspicuous place on the premises affected. If the identities of any owners or the whereabouts of persons are unknown and cannot be ascertained by the public officer in the exercise of reasonable diligence, and the public officer makes an affidavit to that effect, the serving of the complaint or order upon the owners or other persons may be made by publication in a newspaper having general circulation in the city at least once no later than the time that personal service would be required under this section. When service is made by publication, a notice of the pending proceedings shall be posted in a conspicuous place on the premises affected.

(i) Liens. -

1) The amount of the cost of repairs, alterations, or improvements, or vacating and closing, or removal or demolition by the public officer shall be a lien against the real property upon which the cost was incurred, which lien shall be filed, have the same priority, and be collected as the lien for special assessment provided in Article 10 of Chapter 160A of the General Statutes.
2) If the real property upon which the cost was incurred is located in an incorporated city, the amount of the costs is also a lien on any other real property of the owner located within the city limits except for the owner's primary residence. The additional lien provided in this subdivision is inferior to all prior liens and shall be collected as a money judgment.
3) If the nonresidential building or structure is removed or demolished by the public officer, he or she shall offer for sale the recoverable materials of the building or structure and any personal property, fixtures, or appurtenances found in or attached to the building or structure and shall credit the proceeds of the sale, if any, against the cost of the removal or demolition, and any balance remaining shall be deposited in the superior court by the public officer, shall be secured in a manner directed by the court, and shall be disbursed by the court to the persons found to be entitled thereto by final order or decree of the court. Nothing in this section shall be construed to impair or limit in any way the power of the governing body to define and declare nuisances and to cause their removal or abatement by summary proceedings or otherwise.

(j) Ejectment. - If any occupant fails to comply with an order to vacate a nonresidential building or structure, the public officer may file a civil action in the name of the city to remove the occupant. The action to vacate shall be in the nature of summary ejectment and shall be commenced by filing a complaint naming as parties-defendant any person occupying the nonresidential building or structure. The clerk of superior court shall issue a summons requiring the defendant to appear before a magistrate at a certain time, date, and place not to exceed 10 days from the issuance of the summons to answer the complaint. The summons and complaint shall be served as provided in G.S. 42-29. The summons shall be returned according to its tenor, and if on its return it appears to have been duly served and if at the hearing the public officer produces a certified copy of an ordinance adopted by the governing body pursuant to subsection (f) of this section to vacate the occupied nonresidential building or structure, the magistrate shall enter judgment ordering that the premises be vacated and all persons be removed. The judgment ordering that the nonresidential building or structure be vacated shall be enforced in the same manner as the judgment for summary ejectment entered under G.S. 42-30. An appeal from any judgment entered under this subsection by the magistrate may be taken as provided in G.S. 7A-228, and the execution of the judgment may be stayed as provided in G.S. 7A-227. An action to remove an occupant of a nonresidential building or structure who is a tenant of the owner may not be in the nature of a summary ejectment proceeding pursuant to this subsection unless the occupant was served with notice, at least 30 days before the filing of the summary

ejectment proceeding, that the governing body has ordered the public officer to proceed to exercise his duties under subsection (f) of this section to vacate and close or remove and demolish the nonresidential building or structure.

(k) Civil Penalty. - The governing body may impose civil penalties against any person or entity that fails to comply with an order entered pursuant to this section. However, the imposition of civil penalties shall not limit the use of any other lawful remedies available to the governing body for the enforcement of any ordinances adopted pursuant to this section.

(l) Powers Supplemental. - The powers conferred by this section are supplemental to the powers conferred by any other law. An ordinance adopted by the governing body may authorize the public officer to exercise any powers necessary or convenient to carry out and effectuate the purpose and provisions of this section, including the following powers in addition to others herein granted:

1) To investigate nonresidential buildings and structures in the city to determine whether they have been properly maintained in compliance with the minimum standards so that the safety or health of the occupants or members of the general public are not jeopardized.
2) To administer oaths, affirmations, examine witnesses, and receive evidence.
3) To enter upon premises pursuant to subsection (b) of this section for the purpose of making examinations in a manner that will do the least possible inconvenience to the persons in possession.
4) To appoint and fix the duties of officers, agents, and employees necessary to carry out the purposes of the ordinances adopted by the governing body.
5) To delegate any of his or her functions and powers under the ordinance to other officers and agents.

(m) Appeals. - The governing body may provide that appeals may be taken from any decision or order of the public officer to the city's housing appeals board or zoning board of adjustment. Any person aggrieved by a decision or order of the public officer shall have the remedies provided in G.S. 160A-446.

(n) Funding. - The governing body is authorized to make appropriations from its revenues necessary to carry out the purposes of this section and may accept and apply grants or donations to assist in carrying out the provisions of the ordinances adopted by the governing body.

(o) No Effect on Just Compensation for Taking by Eminent Domain. - Nothing in this section shall be construed as preventing the owner or owners of any property from receiving just compensation for the taking of property by the power of eminent domain under the laws of this State, nor as permitting any property to be condemned or destroyed except in accordance with the police power of the State.

(p) Definitions. -

1) "Parties in interest" means all individuals, associations, and corporations who have interests of record in a nonresidential building or structure and any who are in possession thereof.
2) "Vacant industrial warehouse" means any building or structure designed for the storage of goods or equipment in connection with manufacturing processes, which has not been used for that purpose for at least one year and has not been converted to another use.
3) "Vacant manufacturing facility" means any building or structure previously used for the lawful production or manufacturing of goods, which has not been used for that purpose for at least one year and has not been converted to another use. (2007-414, s. 1.)

APPLICATION FOR EXAMINATION

MAIL TO: STATE BOARD OF EXAMINERS OF ELECTRICAL CONTRACTORS
3101 INDUSTRIAL DRIVE, SUITE 206, RALEIGH, NC 27609
TELEPHONE: (919) 733-9042 ext. 206 FAX: (800) 691-8399

$30.00 APPLICATION FEE AND $60.00 EXAMINATION FEE FOR ALL CLASSIFICATIONS

****PLEASE NOTE: APPLICATION FEE IS NON-REFUNDABLE****

Before completing, PLEASE READ SECTION .0200-EXAMINATIONS beginning on page 30 in this bulletin.

1. CLASSIFICATION OF EXAMINATION (CHECK CLASSIFICATION):

❑ LIMITED ❑ INTERMEDIATE ❑ UNLIMITED ❑ SP-SFD ❑ SP-FA/LV

❑ SP-PH ❑ SP-EL ❑ SP-WP ❑ SP-ES ❑ SP-SP

2. NAME_____SOCIAL SECURITY #_____
FIRST MIDDLE LAST

ADDRESS_____ZIP CODE_____COUNTY_____
STREET, P.O. BOX OR RURAL ROUTE CITY STATE

PHONE_____EMAIL_____DATE OF BIRTH_____
AREA CODE

3. HAVE YOU EVER BEEN APPROVED TO TAKE AN EXAMINATION CONDUCTED BY THIS BOARD FOR AN ELECTRICAL CONTRACTING LICENSE?

_____WHICH CLASSIFICATION?_____

4. NAME OF PRESENT EMPLOYER_____

COMPLETE MAILING ADDRESS_____

PHONE_____DATE EMPLOYED_____
AREA CODE

IN WHAT CAPACITY ARE YOU PRESENTLY EMPLOYED?_____

UNDER STATE LAW, AN APPLICANT IS NOT REQUIRED TO INCLUDE A REFERENCE TO OR INFORMATION CONCERNING ANY ARREST, CHARGE OR CONVICTION THAT HAVE BEEN EXPUNGED

5. HAVE YOU BEEN CONVICTED OF A MISDEMEANOR (EXCLUDING MINOR TRAFFIC VIOLATIONS) DURING THE PAST 3 YEARS? ❑ YES ❑ NO

HAVE YOU EVER BEEN CONVICTED OF A FELONY? ❑ YES ❑ NO

IF YES TO EITHER, EXPLAIN ON REVERSE SIDE OF THIS FORM AND PROVIDE A COPY OF THE COURT JUDGMENT. IF A COPY OF THE COURT JUDGMENT WAS PREVIOUSLY SUBMITTED, INITIAL HERE AND DO NOT RE-SUBMIT.

6. THE APPLICANT AUTHORIZES THE BOARD TO RESEARCH AND VERIFY THE INFORMATION SUBMITTED CONCERNING THIS APPLICATION.

DATE_____SIGNATURE OF APPLICANT_____

7. **METHOD OF PAYMENT** ❑ CHECK (*made payable to* **NCBEEC**) ❑ MONEY ORDER ❑ CREDIT CARD

CARD NUMBER_____EXPIRATION DATE_____SECURITY CODE_____

NAME ON CARD_____BILLING ADDRESS_____

(FOR BOARD USE ONLY)

APPROVED BY_____DATE_____FEE_____BATCH/RECEIPT#_____

EXPERIENCE_____S&D FORMS_____CHARACTER_____

DATA ENTRY_____BY_____LIC#/NAME_____GRADE_____

COURTLOGIC.COM_____

APPLICATION FOR EXAMINATION INSTRUCTIONS

IMPORTANT – READ CAREFULLY

To be considered for a qualifying examination administered by the Board, the applicant must be at least eighteen (18) years as certified by date of birth shown on the application and must submit a completed application form, together with the following required information:

- Statements from present and/or past employer(s) satisfactorily verifying that the applicant has acquired the minimum years of experience for the examination classification desired (see *Employer Statement Forms*, in back of this bulletin).
- Statement from **TWO** (2) responsible persons attesting to applicant's good character (see *Character Statement Forms*, in back of this bulletin).
- UNLIMITED CLASSIFICATION ONLY: Statements from **TWO** (2) responsible persons attesting to applicant's ability to satisfactorily supervise and direct all electrical wiring or electrical installation work done by an electrical contracting business in the **UNLIMITED CLASSIFICATION** (see Supervise and *Direct Statement Forms*, in back of this bulletin).
- Appropriate application **and** examination fee in a check or money order payable to the **"NCBEEC"** or payment by credit card.

NOTICE OF PROCESSING FEE FOR SUBMITTAL OF BAD CHECK

Pursuant to Rule .0107 of Title 21, Chapter 18B, of the North Carolina Administrative Code, any person, partnership, firm, or corporation submitting a check to the Board that is subsequently returned because of **insufficient funds** or **no account at a bank** will be charged a **processing fee** of **$25.00** for such a check; and, until the payer has made the check good and paid the $25.00 processing fee, the payer will not be eligible to take an examination, review an examination, obtain a license or have a license, renewed. Payment for making good such bad check and for the $25.00 processing fee must be in the form of a cashier's check or money order payable to the **"NCBEEC".**

EMPLOYER STATEMENT FORM

STATE BOARD OF EXAMINERS OF ELECTRICAL CONTRACTORS
3101 INDUSTRIAL DRIVE, SUITE 206, RALEIGH, NC 27609

TO APPLICANT: THIS IS TO BE COMPLETED BY YOUR PRESENT OR PAST EMPLOYER. ONCE THIS DOCUMENT IS COMPLETED, SIGNED, AND ***NOTARIZED***, IT MUST BE SUBMITTED IN ORIGINAL FORM WITH YOUR APPLICATION.

NOTE: ALTERED FORMS OR COPIES OF COMPLETED FORMS WILL NOT BE ACCEPTED.

TO EMPLOYER: RE: EXPERIENCE AND CHARACTER VERIFICATION

NOTICE: *In order to maintain the high standards of the electrical contracting trade, it is imperative that extreme care be exercised in verifying an applicant's experience*. Please refer to Board's Rule .0202 for further information (see next page). **The Board reserves the right to review all employment records in making a final determination of an applicant's experience.**

This is to certify that_____ is/was employed by this firm in the following capacity or capacities (verify experience only in the electrical or applicable special restricted field for which the applicant is requesting to be examined and specify the respective field): **Employer representative must enter total hours worked and capacity or capacities worked.**

a) **SECONDARY EXPERIENCE: (Example Apprentice** or **helper)** in the electrical or special restricted field: **ENTER DATES OF EMPLOYMENT, CAPACITY AND TOTAL HOURS WORKED IN THAT CAPACITY**:

BEGIN DATE OF EMPLOYMENT:_____ END DATE OF EMPLOYMENT_____

CAPACITY:_____ TOTAL HOURS WORKED_____

b) **PRIMARY EXPERIENCE: (Example Journeyman** or **Mechanic)** in the electrical or special restricted field: **ENTER DATES OF EMPLOYMENT, CAPACITY AND TOTAL HOURS WORKED IN THAT CAPACITY**:

BEGIN DATE OF EMPLOYMENT:_____ END DATE OF EMPLOYMENT_____

CAPACITY:_____ TOTAL HOURS WORKED_____

c) **OTHER CAPACITY:** ENTER DATES OF EMPLOYMENT, JOB DESCRIPTION (ATTACH COMPANY OR JOB DESCRIPTION IF AVAILABLE) AND TOTAL HOURS WORKED IN THAT JOB:

BEGIN DATE OF EMPLOYMENT:_____ END DATE OF EMPLOYMENT_____

CAPACITY:_____ TOTAL HOURS WORKED_____

Please check one of the following that best describes this applicant's character: ❑ GOOD ❑ NOT GOOD ❑ NO OPINION

Other comments:_____

EMPLOYER_____ _____
SIGNATURE OF EMPLOYER REPRESENTATIVE

ADDRESS_____ _____
PRINTED NAME OF EMPLOYER REPRESENTATIVE

_____ _____
Title

DATE_____ PHONE _____
AREA CODE

STATE OF_____ COUNTY OF_____

I, a notary public of the county and state aforesaid, certify that the ***employer representative*** whose signature appears above personally appeared before me this day and signed the foregoing document.

Witness my hand and official seal, this _ _____ day of _____, _____.

Notary Public

My commission expires _____.

(FOR BOARD USE ONLY)

APPROVED BY: _____ DATE:_____ EMPL REP_____

.0202 EXPERIENCE

(a) Primary. As used in this Chapter, primary experience means working experience gained by the applicant while engaged directly in the installation of electrical wiring and equipment governed by the National Electrical Code or work activities directly related thereto. Examples of the capacity in which a person may work in gaining primary experience and the percentages for creditable primary experience are as follows:

		Percentage
1)	journeyman electrician or electrician mechanic, both meaning the same;	100
2)	electrical foreman;	100
3)	electrical general foreman;	100
4)	electrical superintendent;	100
5)	electrical general superintendent;	100
6)	estimator for licensed electrical contractor;	100
7)	electrical inspector recognized as such by the State Department of Insurance;	100
8)	time spent by a professional engineer who is responsible for follow-up project supervision, beyond the point of delivery, in electrical engineering, design, or consulting;	100
9)	full-time instructor teaching National Electrical Code, NFPA 72 and related electrical courses at a college, university, community college, technical institute, high school or vocational school;	50
10)	maintenance journeyman electrician or electrician mechanic employed in a full-time electrical maintenance department;	100
11)	time actually spent in electrical maintenance by a maintenance journeyman electrician or electrician mechanic regularly employed in other than a full-time electrical maintenance department;	100
12)	military person holding an electrician rating or rank of at least E-4 who is engaged in land based electrical installations similar or equivalent to work performed by an electrical contractor;	100
13)	time actually spent in part-time or incidental work in any primary experience category;	100
14)	time actually spent installing or maintaining fire alarm/low voltage systems;	100
15)	time as a holder of NICET certification on NFPA 72 Level I, II or III;	50
16)	time as a holder of NICET certification on NFPA 72 Level IV.	100

In calculating accumulative primary experience, a total of 2,000 hours shall equal one creditable year. The total number of creditable years shall be calculated by dividing the total hours of primary experience by 2,000. Example: Applicant has worked in primary capacity for a total of 7,200 hours of primary experience.

$\frac{7,200}{2,000}$ = 3.6 years creditable primary work experience

(b) Secondary. As used in this Chapter, secondary experience means working experience gained while engaged in work or training that is related to the installation of electrical wiring and equipment governed by the National Electrical Code. Examples of the type of work or training in which a person may engage to gain creditable secondary experience and the percentages for creditable secondary experience are as follows:

		Percentage
1)	apprentice electrician training in an apprentice program approved by the NC Department of Labor;	100
2)	time spent as an apprentice electrician or helper other than as described in subparagraphs (1) and (3) of this paragraph;	80
3)	time actually spent in electrical maintenance by a maintenance apprentice or electrician helper regularly employed in other than a full-time electrical maintenance department;	80
4)	student satisfactorily completing National Electrical Code and related electrical courses at a college, university, community college, technical institute, high school or vocational school;	50
5)	Time spent by a professional engineer who is not responsible for follow-up project supervision, beyond the point of delivery, in electrical engineering, design, or consulting;	50
6)	Electrical construction design under the supervision of a professional engineer;	50
7)	sales representative for an electrical wholesaler, distributor, or manufacturer;	20
8)	appliance service and repair;	20
9)	electric utility lineman; and	10
10)	electric utility serviceman	20

In calculating accumulative secondary experience, a total of 2,000 hours shall equal one creditable year. The total number of creditable years shall be calculated by applying the percentage for creditable secondary experience and dividing the remainder hours by 2,000. Example: Applicant has 1,000 hours of work experience as a helper or regular apprentice and 2,200 hours of experience while enrolled in an approved apprentice training program: 1,000 hours at 80 percent = 800 hours secondary experience; 2,200 hours at 100 percent = 2,200 hours secondary experience;

$\frac{800 + 2,200}{2,000}$ = 1.5 years creditable secondary experience

(c) Other Experience. The Board shall approve other experience that it finds to be equivalent or similar to the primary or secondary experience defined in this Rule.

History Note: Authority G.S. 87-42; 87-43.3; 87-43.4;
Eff. October 1, 1988;
Amended Eff. January 1, 2010; March 1, 1999.

EMPLOYER STATEMENT FORM

STATE BOARD OF EXAMINERS OF ELECTRICAL CONTRACTORS
3101 INDUSTRIAL DRIVE, SUITE 206, RALEIGH, NC 27619-8727

TO APPLICANT: THIS IS TO BE COMPLETED BY YOUR PRESENT OR PAST EMPLOYER. ONCE THIS DOCUMENT IS COMPLETED, SIGNED, AND ***NOTARIZED***, IT MUST BE SUBMITTED IN ORIGINAL FORM WITH YOUR APPLICATION.

NOTE: ALTERED FORMS OR COPIES OF COMPLETED FORMS WILL NOT BE ACCEPTED.

TO EMPLOYER: RE: EXPERIENCE AND CHARACTER VERIFICATION

NOTICE: *In order to maintain the high standards of the electrical contracting trade, it is imperative that extreme care be exercised in verifying an applicant's experience*. Please refer to Board's Rule .0202 for further information (see next page). **The Board reserves the right to review all employment records in making a final determination of an applicant's experience.**

This is to certify that_____ is/was employed by this firm in the following capacity or capacities (verify experience only in the electrical or applicable special restricted field for which the applicant is requesting to be examined and specify the respective field): **Employer representative must enter total hours worked and capacity or capacities worked.**

a) **SECONDARY EXPERIENCE: (Example Apprentice** or **helper)** in the electrical or special restricted field: **ENTER DATES OF EMPLOYMENT, CAPACITY AND TOTAL HOURS WORKED IN THAT CAPACITY**:

BEGIN DATE OF EMPLOYMENT:_____ END DATE OF EMPLOYMENT_____

CAPACITY:_____ TOTAL HOURS WORKED_____

b) **PRIMARY EXPERIENCE: (Example Journeyman** or **Mechanic)** in the electrical or special restricted field: **ENTER DATES OF EMPLOYMENT, CAPACITY AND TOTAL HOURS WORKED IN THAT CAPACITY**:

BEGIN DATE OF EMPLOYMENT:_____ END DATE OF EMPLOYMENT_____

CAPACITY:_____ TOTAL HOURS WORKED_____

c) **OTHER CAPACITY:** ENTER DATES OF EMPLOYMENT, JOB DESCRIPTION (ATTACH COMPANY OR JOB DESCRIPTION IF AVAILABLE) AND TOTAL HOURS WORKED IN THAT JOB:

BEGIN DATE OF EMPLOYMENT:_____ END DATE OF EMPLOYMENT_____

CAPACITY:_____ TOTAL HOURS WORKED_____

Please check one of the following that best describes this applicant's character: ❑ GOOD ❑ NOT GOOD ❑ NO OPINION

Other comments:_____

EMPLOYER_____ _____
SIGNATURE OF EMPLOYER REPRESENTATIVE

ADDRESS_____ _____
PRINTED NAME OF EMPLOYER REPRESENTATIVE

_____ _____
Title

DATE_____ PHONE _____
AREA CODE

STATE OF_____ COUNTY OF_____

I, a notary public of the county and state aforesaid, certify that the ***employer representative*** whose signature appears above personally appeared before me this day and signed the foregoing document.

Witness my hand and official seal, this _ _____ day of _____, _____.

Notary Public

My commission expires _____.

(FOR BOARD USE ONLY)

APPROVED BY: _____ DATE:_____ EMPL REP_____

.0202 EXPERIENCE

(a) Primary. As used in this Chapter, primary experience means working experience gained by the applicant while engaged directly in the installation of electrical wiring and equipment governed by the National Electrical Code or work activities directly related thereto. Examples of the capacity in which a person may work in gaining primary experience and the percentages for creditable primary experience are as follows:

	Percentage
17) journeyman electrician or electrician mechanic, both meaning the same;	100
18) electrical foreman;	100
19) electrical general foreman;	100
20) electrical superintendent;	100
21) electrical general superintendent;	100
22) estimator for licensed electrical contractor;	100
23) electrical inspector recognized as such by the State Department of Insurance;	100
24) time spent by a professional engineer who is responsible for follow-up project supervision, beyond the point of delivery, in electrical engineering, design, or consulting;	100
25) full-time instructor teaching National Electrical Code, NFPA 72 and related electrical courses at a college, university, community college, technical institute, high school or vocational school;	50
26) maintenance journeyman electrician or electrician mechanic employed in a full-time electrical maintenance department;	100
27) time actually spent in electrical maintenance by a maintenance journeyman electrician or electrician mechanic regularly employed in other than a full-time electrical maintenance department;	100
28) military person holding an electrician rating or rank of at least E-4 who is engaged in land based electrical installations similar or equivalent to work performed by an electrical contractor;	100
29) time actually spent in part-time or incidental work in any primary experience category;	100
30) time actually spent installing or maintaining fire alarm/low voltage systems;	100
31) time as a holder of NICET certification on NFPA 72 Level I, II or III;	50
32) time as a holder of NICET certification on NFPA 72 Level IV.	100

In calculating accumulative primary experience, a total of 2,000 hours shall equal one creditable year. The total number of creditable years shall be calculated by dividing the total hours of primary experience by 2,000. Example: Applicant has worked in primary capacity for a total of 7,200 hours of primary experience.

$\frac{7,200}{2,000}$ = 3.6 years creditable primary work experience

(b) Secondary. As used in this Chapter, secondary experience means working experience gained while engaged in work or training that is related to the installation of electrical wiring and equipment governed by the National Electrical Code. Examples of the type of work or training in which a person may engage to gain creditable secondary experience and the percentages for creditable secondary experience are as follows:

	Percentage
11) apprentice electrician training in an apprentice program approved by the NC Department of Labor;	100
12) time spent as an apprentice electrician or helper other than as described in subparagraphs (1) and (3) of this paragraph;	80
13) time actually spent in electrical maintenance by a maintenance apprentice or electrician helper regularly employed in other than a full-time electrical maintenance department;	80
14) student satisfactorily completing National Electrical Code and related electrical courses at a college, university, community college, technical institute, high school or vocational school;	50
15) Time spent by a professional engineer who is not responsible for follow-up project supervision, beyond the point of delivery, in electrical engineering, design, or consulting;	50
16) Electrical construction design under the supervision of a professional engineer;	50
17) sales representative for an electrical wholesaler, distributor, or manufacturer;	20
18) appliance service and repair;	20
19) electric utility lineman; and	10
20) electric utility serviceman	20

In calculating accumulative secondary experience, a total of 2,000 hours shall equal one creditable year. The total number of creditable years shall be calculated by applying the percentage for creditable secondary experience and dividing the remainder hours by 2,000. Example: Applicant has 1,000 hours of work experience as a helper or regular apprentice and 2,200 hours of experience while enrolled in an approved apprentice training program: 1,000 hours at 80 percent = 800 hours secondary experience; 2,200 hours at 100 percent = 2,200 hours secondary experience;

$\frac{800 + 2,200}{2,000}$ = 1.5 years creditable secondary experience

(c) Other Experience. The Board shall approve other experience that it finds to be equivalent or similar to the primary or secondary experience defined in this Rule.

History Note: Authority G.S. 87-42; 87-43.3; 87-43.4;
Eff. October 1, 1988;
Amended Eff. January 1, 2010; March 1, 1999.

CHARACTER STATEMENT FORM

TO: STATE BOARD OF EXAMINERS OF ELECTRICAL CONTRACTORS
3101 INDUSTRIAL DRIVE, SUITE 206
RALEIGH, NC 27609

This is to certify that I have known_____ for approximately

_____ years and that in my opinion he/she is of good character.

This_____ day of _____ ,_____ .

SIGNED BY_____

TITLE_____

NAME OF FIRM_____

ADDRESS_____

PHONE_____
AREA CODE

CHARACTER STATEMENT FORM

TO: STATE BOARD OF EXAMINERS OF ELECTRICAL CONTRACTORS
3101 INDUSTRIAL DRIVE, SUITE 206
RALEIGH, NC 27609

This is to certify that I have known_____ for approximately

_____ years and that in my opinion he/she is of good character.

This_____ day of _____ ,_____ .

SIGNED BY_____

TITLE_____

NAME OF FIRM_____

ADDRESS_____

PHONE_____
AREA CODE

SUPERVISE AND DIRECT STATEMENT FORM

NOTE: THIS IS A REQUIREMENT FOR THE **UNLIMITED** CLASSIFICATION ONLY. THIS FORM MAY ALSO BE USED FOR A GOOD CHARACTER STATEMENT AS NOTED BELOW. **PLEASE DO NOT SUBMIT WHEN FILING FOR OTHER CLASSIFICATIONS.**

TO: STATE BOARD OF EXAMINERS OF ELECTRICAL CONTRACTORS
3101 INDUSTRIAL DRIVE, SUITE 206
RALEIGH, NC 27609

This is to certify that I have known_____ for approximately _____ years; that I am knowledgeable of his/her electrical experience; and that in my opinion he/she does have the ability to satisfactorily supervise and direct all electrical wiring or electrical installation work done by an electrical contracting business in the ***UNLIMITED*** classification.

Please check one of the following that best gives your opinion of this applicant's character:

❑ GOOD ❑ NOT GOOD ❑ NO OPINION

This_____ day of _____ ,_____ .

SIGNED BY_____

TITLE_____

NAME OF FIRM_____

ADDRESS_____

PHONE_____
AREA CODE

SUPERVISE AND DIRECT STATEMENT FORM

NOTE: THIS IS A REQUIREMENT FOR THE **UNLIMITED** CLASSIFICATION ONLY. THIS FORM MAY ALSO BE USED FOR A GOOD CHARACTER STATEMENT AS NOTED BELOW. **PLEASE DO NOT SUBMIT WHEN FILING FOR OTHER CLASSIFICATIONS.**

TO: STATE BOARD OF EXAMINERS OF ELECTRICAL CONTRACTORS
3101 INDUSTRIAL DRIVE, SUITE 206
RALEIGH, NC 27609

This is to certify that I have known_____ for approximately _____ years; that I am knowledgeable of his/her electrical experience; and that in my opinion he/she does have the ability to satisfactorily supervise and direct all electrical wiring or electrical installation work done by an electrical contracting business in the ***UNLIMITED*** classification.

Please check one of the following that best gives your opinion of this applicant's character:

❑ GOOD ❑ NOT GOOD ❑ NO OPINION

This_____ day of _____ ,_____ .

SIGNED BY_____

TITLE_____

NAME OF FIRM_____

ADDRESS_____

PHONE_____
AREA CODE

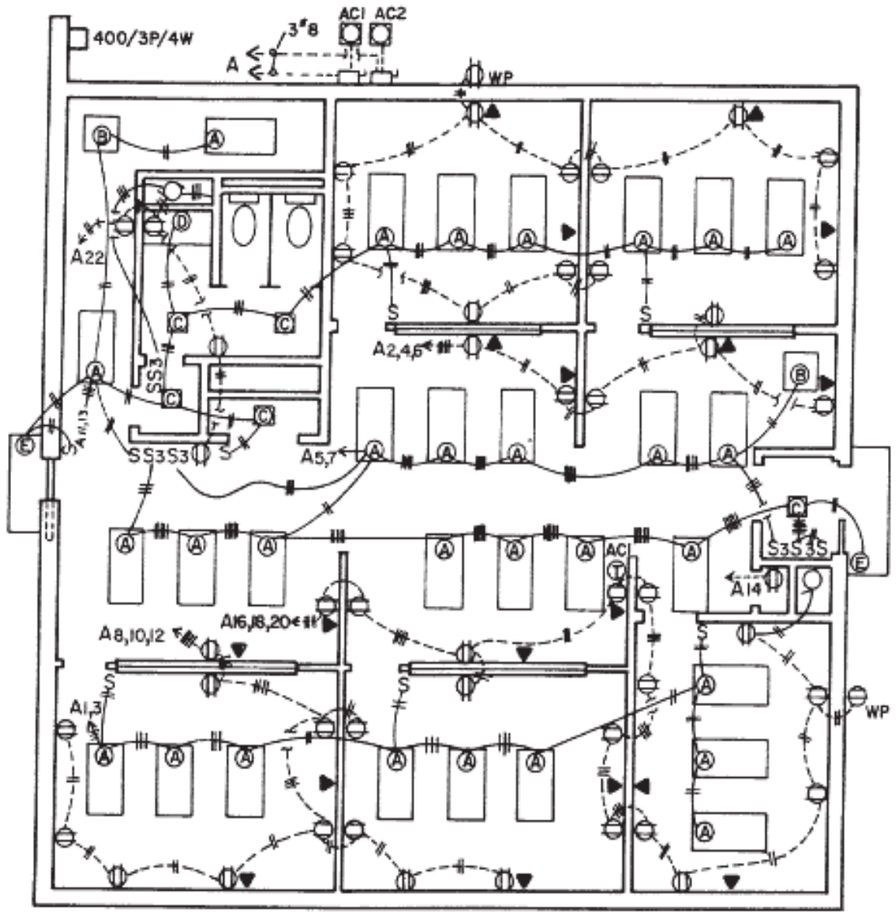

FIRST FLOOR LIGHTING & POWER PLAN SCALE 1/8"=1'-0"

N

NOTES

1. FURNISH AND INSTALL 4 SPOOL RACK FOR SERVICE ATTACHMENT.
2. MAIN SWITCH SHALL BE 400A, 3P, S/N, 240 V, NEMA I WITH 400A FUSETRONS.
3. C.T. CABINET AND METER CAN F.B.O., INSTALLED BY ELECTRICAL.
4. PANEL SHALL BE:
   SQ. D TYPE NQOB
   225A. M.C.B. WITH:
   28 ACTIVE 20/1 C.B.
   8 SPARE 20/1 C.B.
   2 ACTIVE 50/3 C.B.
   120/208V, 3Ø, 4W, S/N.
5. TELEPHONE SERVICE IS TO BE 4" RIGID STEEL WITH PULL WIRE FROM SERVICE ATTACHMENT POINT TO TBB.
6. DEVICES SHALL BE:
   S HUBBELL # 1201
   S3 HUBBELL # 1203
   HUBBELL # 5262
   PLATES SHALL BE BROWN PHENOLIC.
7. WIRE SHALL BE COPPER, THW INSULATION, #12 MIN.
8. EXHAUST FANS (500 watts each) and A. EQUIPMENT ARE BY OTHERS BUT WIRED BY ELECTRICAL RUN 5 #12 FROM THERMOSTAT ON EACH FLOOR TO ALL A.C. EQUIPMENT FOR THAT FLOOR.
9. FURNISH ALL ITEMS REQUIRED FOR A COMPLETE INSTALLATION FOR ALL WORK INDICATED ON ELECTRICAL DRAWINGS. INSTALLATION SHALL BE IN CONFORMANCE WITH N.E.C.
10. ALTERNATE BID. DEDUCT _____ IF ALL LIGHT FIXTURES WITH LAMPS ARE FURNISHED BY OWNER, INSTALLED BY E.C.

CONSTRUCTION NOTES

FLOOR HEIGHT 10'0"
CEILING HEIGHT 9'0"
CEILING IS 2'X4' LAY-IN TILE
FRAMING IS BAR JOISTS
PARTITIONS ARE METAL STUDS AND 1/2" DRY WALL.

COLOR CODE SPECIFICATION

PHASE A: BLACK
PHASE B: RED
PHASE C: BLUE
NEUTRAL N: WHITE

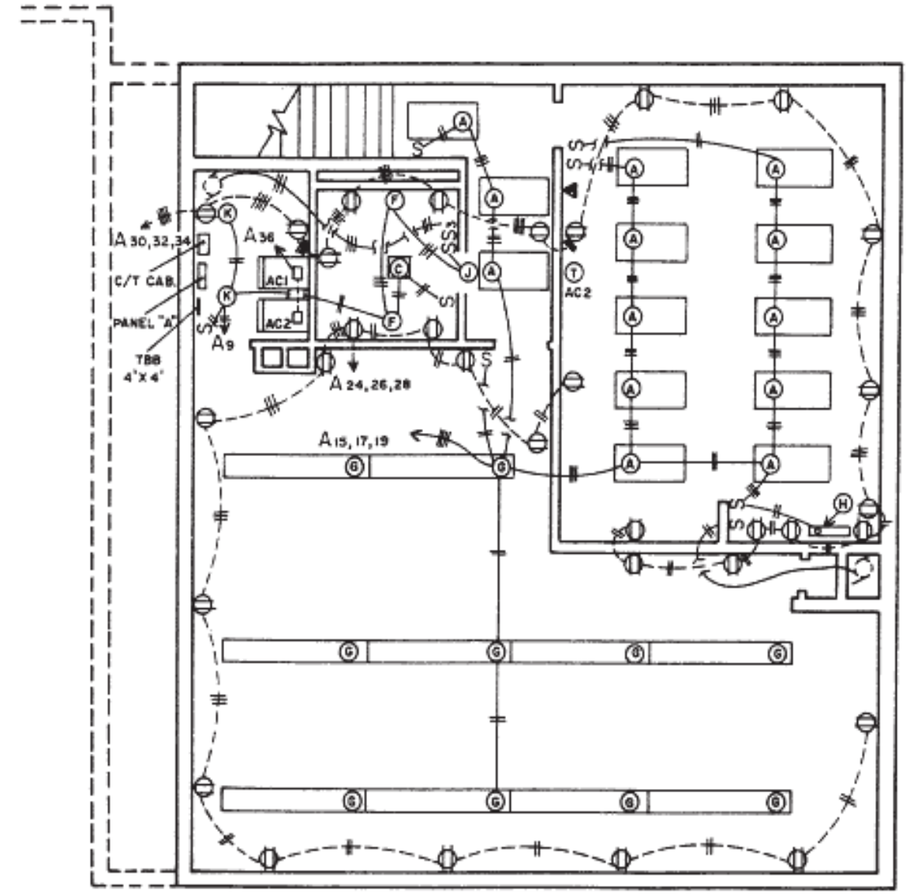

BASEMENT LIGHTING AND POWER PLAN SCALE 1/8"=1'-0"

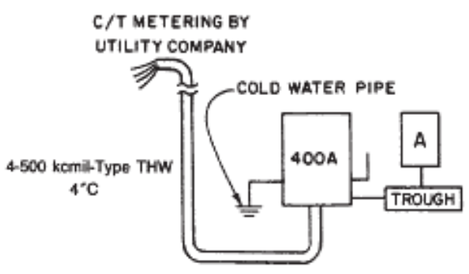

ELECTRICAL RISER DIAGRAM

LEGEND

EMT
RIGID METAL CONDUIT
S S.P. SWITCH
S3 3 WAY SWITCH
DUPLEX RECEPTACLE
TELEPHONE
EXHAUST FAN

TYPICAL TELEPHONE

FIXTURE SCHEDULE

MARK	CAT. NO.	MOUNTING	LAMPS
A	LITHONIA 2S240 A12	RECESSED	2-F40T12/RS/CW
B	LITHONIA 2F2U40 A12	RECESSED	2-F40U/CW
C	ART METAL 15-101-5WS	RECESSED	1-150 IF
D	ART METAL 3549	SURFACE	2-75 IF
E	ART METAL 3670	SURFACE	1-150 IF
F	SAFELITE	SURFACE	1-151F
G	LITHONIA C296	SURFACE	2-F96T12/CW/SL
H	LITHONIA S120TS	SURFACE	1-F20TS/CW
J	ART METAL R94	RECESSED	1-100 IF
K	KEYLESS	SURFACE	1-100 IF

MINIMUM FLEXIBLE METAL CONDUIT TO RECESSED FIXTURES 4'

PANEL A — 225 AMP BUS — ☐MLO ☒MB — VOLTAGE 120/208 3Φ4W — MOUNTING ☐FLUSH ☒SURFACE

LOAD SERVED	WIRE AND CONDUIT	BKR SIZE				BKR SIZE	WIRE AND CONDUIT	LOAD SERVED
LIGHTS		20	1		2	20		RECEPTACLE
			3		4			
			5		6			
			7		8			
			9		10			
			11		12			
			13		14			
			15		16			
			17		18			
LIGHTS		20	19		20			
SPARE		20	21		22			
			23		24			
			25		26			
			27		28			
			29		30			
			31		32			
			33		34			RECEPTACLE
SPARE		20	35		36	20		AC-1 AND AC-2 FANS
			37		38			
AC-1 SWITCH		50	39		40	50		AC-2 SWITCH
			41		42			

SQ D
TYPE NQOB

225 AMP MAIN BREAKER

STATE BOARD OF EXAMINERS
OF ELECTRICAL CONTRACTORS
3101 INDUSTRIAL DR.,
SUITE 206
RALEIGH, NC 27609

MEDIA MAIL